Controller
KR C5 micro
Assembly Instructions

Issued: 21.09.2020
MA KR C5 micro V3
KUKA Deutschland GmbH

© Copyright 2020

KUKA Deutschland GmbH
Zugspitzstraße 140
D-86165 Augsburg
Germany

This documentation or excerpts therefrom may not be reproduced or disclosed to third parties without the express permission of KUKA Deutschland GmbH.

Other functions not described in this documentation may be operable in the controller. The user has no claims to these functions, however, in the case of a replacement or service work.

We have checked the content of this documentation for conformity with the hardware and software described. Nevertheless, discrepancies cannot be precluded, for which reason we are not able to guarantee total conformity. The information in this documentation is checked on a regular basis, however, and necessary corrections will be incorporated in the subsequent edition.

Subject to technical alterations without an effect on the function.

KIM-PS5-DOC

Translation of the original documentation

Publication:	Pub MA KR C5 micro (PDF) en
	PB11486
Book structure:	MA KR C5 micro V3.1
	BS6146
Version:	MA KR C5 micro V3

Contents

1 Introduction ... 7

1.1 Target group ... 7
1.2 Industrial robot documentation ... 7
1.3 Representation of warnings and notes ... 7
1.4 Trademarks ... 8
1.5 Terms used ... 8

2 Product description ... 11

2.1 Description of the industrial robot ... 11
2.2 Overview of the robot controller ... 11
2.2.1 Control box with “Basic” system board ... 12
2.2.2 Drive box ... 13
2.3 Description of interfaces ... 13
2.4 Controller System Panel ... 14
2.5 Cooling ... 14
2.6 Intended use and misuse ... 15

3 Safety ... 17

3.1 General ... 17
3.1.1 Liability ... 17
3.1.2 EC declaration of conformity and declaration of incorporation ... 17
3.1.3 Terms in the “Safety” chapter ... 18
3.2 Personnel ... 20
3.3 Workspace, safety zone and danger zone ... 22
3.3.1 Determining stopping distances ... 22
3.4 Triggers for stop reactions: KSS ... 22
3.5 Triggers for stop reactions: VSS ... 23
3.6 Safety functions ... 24
3.6.1 Overview of the safety functions ... 24
3.6.2 Safety controller ... 24
3.6.3 Operating mode selection: KSS ... 25
3.6.4 Operating mode selection: VSS ... 26
3.6.5 “Operator safety” signal: KSS ... 27
3.6.6 “Operator safety” signal: VSS ... 28
3.6.7 EMERGENCY STOP device ... 28
3.6.8 Logging off from the higher-level safety controller ... 28
3.6.9 External EMERGENCY STOP device ... 29
3.6.10 Enabling device ... 29
3.6.11 External enabling device ... 31
3.6.12 Velocity monitoring in T1 ... 31
3.7 Additional protective equipment ... 31
3.7.1 Jog mode ... 31
3.7.2 Software limit switches ... 32
3.7.3 Mechanical end stops ... 32
3.7.4 Mechanical axis limitation (optional) ... 32
3.7.5 Options for moving the manipulator without drive energy ... 33
3.7.6 Labeling on the industrial robot ... 33

3.7.7 External safeguards ... 34
3.8 Overview of operating modes and safety functions: KSS ... 34
3.9 Overview of operating modes and safety functions: VSS ... 35
3.10 Safety measures ... 35
3.10.1 General safety measures ... 35
3.10.2 IT security ... 36
3.10.3 Transportation ... 37
3.10.4 Start-up and recommissioning: KSS/VSS ... 37
3.10.4.1 Checking machine data and safety configuration ... 39
3.10.4.2 Start-up mode ... 41
3.10.5 Manual mode ... 43
3.10.6 Simulation ... 44
3.10.7 Automatic mode ... 44
3.10.8 Maintenance and repair ... 44
3.10.9 Decommissioning, storage and disposal ... 46
3.10.10 Safety measures for single point of control ... 46

4 Technical data ... 49

4.1 Basic data ... 49
4.2 Dimensions ... 51
4.3 Minimum clearances, robot controller ... 51
4.4 Minimum clearances for installation in an external housing ... 52
4.5 Plates and labels ... 53
4.6 REACH duty to communicate information acc. to Art. 33 ... 55

5 Planning ... 57

5.1 Overview of planning ... 57
5.2 Electromagnetic compatibility (EMC) ... 57
5.3 Installation conditions ... 58
5.4 Installation with holders ... 62
5.5 PE equipotential bonding ... 64
5.6 Connection conditions ... 65
5.7 Routing the connecting cables ... 66
5.8 Power supply connection ... 67
5.9 Overview of interfaces ... 67
5.9.1 XGSD interface, SD card ... 71
5.9.2 USB interface ... 71
5.9.3 Interfaces XF1 - XF8 ... 71
5.9.3.1 KSI interface ... 72
5.9.3.2 KONI interface ... 72
5.9.3.3 Daisy chain interface ... 73
5.9.3.4 KLI interfaces ... 73
5.9.3.5 KLI IT interface ... 73
5.9.3.6 KEI interface ... 73
5.9.4 XGDP interface ... 74
5.9.5 XG12 digital I/O interfaces ... 74
5.9.6 XD12 and XD12.1 power supply interfaces ... 76
5.9.7 XD2 UPS interface ... 76
5.9.8 Safety interfaces ... 79

5.9.8.1 Interface XG58, external enabling switch ... 79
5.9.8.2 Safety interface XG11.1 ... 81
5.9.8.3 Wiring examples for safe inputs and outputs ... 82
5.9.9 Safety functions via Ethernet safety interface (optional) ... 85
5.9.10 XG33 Fast Measurement inputs ... 89
5.9.10.1 Power supply for Fast Measurement ... 90
5.9.11 Connecting data cables XF21 ... 91
5.9.12 XD20.1 and XD20.2 motor interface ... 92
5.10 Performance level ... 93
5.10.1 PFH values of the safety functions ... 93

6 Transportation ... 95

6.1 Transportation with trolley ... 95

7 Start-up and recommissioning ... 97

7.1 Start-up overview ... 97
7.2 Installing the robot controller ... 99
7.3 Connecting the connecting cables and ground conductor ... 100
7.4 Plugging in the KUKA smartPAD ... 101
7.5 Connecting the mains power supply ... 101
7.6 Connecting the UPS ... 101
7.7 Configuring and connecting safety interface XG11.1 ... 102
7.8 Configuring and connecting safety interface XG58 ... 102
7.9 Switching on the robot controller ... 102
7.10 Concluding work ... 103

8 Operation ... 105

8.1 Switching on the robot controller ... 105
8.2 Function of soft power button ... 105

9 Maintenance ... 107

9.1 Cleaning the robot controller ... 108

10 Repair ... 111

10.1 Exchanging the strain relief device ... 111
10.1.1 Installing the strain relief device ... 111
10.1.2 Removing the strain relief device ... 112
10.1.3 Concluding work ... 112
10.2 Exchanging the Mounting brackets 19" frame ... 112
10.2.1 Installing the Mounting brackets 19" frame ... 113
10.2.2 Removing the Mounting brackets 19" frame ... 113
10.2.3 Concluding work ... 114
10.3 Exchanging the SSD hard drive ... 114
10.3.1 Removing the SSD hard drive ... 115
10.3.2 Installing the SSD hard drive ... 115
10.3.3 Concluding work ... 115
10.4 Exchanging the motherboard battery ... 116
10.4.1 Removing the housing cover ... 117
10.4.2 Removing the motherboard battery ... 118
10.4.3 Inserting the motherboard battery ... 118
10.4.4 Installing the housing cover ... 119

10.4.5 Concluding work ... 120
10.5 Exchanging the incoming supply fuse ... 120
10.5.1 Exchanging the incoming supply fuse ... 121
10.5.2 Concluding work ... 121

11 Troubleshooting ... 123

11.1 KSP warning messages ... 123
11.2 Controller System Panel LED display ... 125
11.3 Controller System Panel LED error display ... 127
11.4 Creating or restoring a KR C5 recovery image ... 128
11.4.1 Creating a recovery image ... 129
11.4.2 Restoring a recovery image ... 129
11.4.3 Terminating KUKA.Recovery ... 130
11.4.4 Concluding work ... 131
11.5 System board LED fault indicator ... 131

12 Decommissioning, storage and disposal ... 133

12.1 Decommissioning ... 133
12.1.1 Concluding work ... 133
12.2 Storage ... 133
12.3 Disposal ... 134

13 Appendix ... 137

13.1 Applied standards and regulations ... 137

14 KUKA Service ... 139

14.1 Requesting support ... 139
14.2 KUKA Customer Support ... 139

Index 141

1 Introduction

1.1 Target group

This documentation is aimed at users with the following knowledge and skills:

- Advanced knowledge of electrical and electronic systems
- Advanced knowledge of the robot controller
- Advanced knowledge of the Windows operating system

For optimal use of KUKA products, we recommend the training courses offered by KUKA College. Information about the training program can be found at www.kuka.com or can be obtained directly from our subsidiaries.

1.2 Industrial robot documentation

The industrial robot documentation consists of the following parts:

- Documentation for the robot arm
- Documentation for the robot controller
- Documentation for the smartPAD-2 (if used)
- Operating and programming instructions for the System Software
- Instructions for options and accessories
- Spare parts overview in KUKA Xpert

Each of these sets of instructions is a separate document.

1.3 Representation of warnings and notes

Safety

These warnings are provided for safety purposes and **must** be observed.

DANGER

These warnings mean that it is certain or highly probable that death or severe injuries **will** occur, if no precautions are taken.

WARNING

These warnings mean that death or severe injuries **may** occur, if no precautions are taken.

CAUTION

These warnings mean that minor injuries **may** occur, if no precautions are taken.

NOTICE

These warnings mean that damage to property **may** occur, if no precautions are taken.

These warnings contain references to safety-relevant information or general safety measures.
These warnings do not refer to individual hazards or individual precautionary measures.

This warning draws attention to procedures which serve to prevent or remedy emergencies or malfunctions:

SAFETY INSTRUCTION
The following procedure must be followed exactly!

Procedures marked with this warning **must** be followed exactly.

Notices

These notices serve to make your work easier or contain references to further information.

Tip to make your work easier or reference to further information.

1.4 Trademarks

- **Windows** is a trademark of Microsoft Corporation.
- **EtherCAT®** is a registered trademark and patented technology, licensed by Beckhoff Automation GmbH, Germany.
- **CIP Safety®** is a trademark of ODVA.

1.5 Terms used

The overview may contain terms symbols that are not relevant for this document.

Term	Description
Br M{*Number*}	Brake Motor{*Nummer*}
Daisy chain	Network technology in which multiple hardware components are connected in series via a bus system.
EDS	Electronic Data Storage (memory card)
EDS cool	Electronic Data Storage cool Memory card with extended temperature range
EMD	Electronic Mastering Device
EMC	Electromagnetic compatibility
EtherNet/IP	Ethernet Industrial Protocol EtherNet/IP is an Ethernet-based field bus (Ethernet interface).
Main switch	The term “main switch” used in this documentation refers to a device switch as defined by relevant standards, as it has no grid isolation function.

HMI	Human-Machine Interface KUKA.HMI is the KUKA user interface.
IFBstd	“Standard” interface board The interface board provides non-safe digital I/Os.
KCB	KUKA Controller Bus
KEB	KUKA Extension Bus
KEI	KUKA EtherCAT Interface
KLI	KUKA Line Interface Connection to higher-level control infrastructure (PLC, archiving)
KRL	KUKA Robot Language KUKA robot programming language
KSB	KUKA System Bus Field bus for internal networking of the controllers
KSI	KUKA Service Interface Interface on the CSP on the control cabinet or robot controller The WorkVisual PC can either connect to the robot controller via the KLI or it can be plugged into the KSI.
KSP	KUKA Servo Pack drive controller
KSS	KUKA System Software
KUKA smartPAD-2	see “smartPAD”
M{*Number*}	Motor {*Number*}
Manipulator	The robot arm and the associated electrical installations
mini CSP	mini Controller System Panel Display and operator control element for the robot controller
NA	North America
PELV	Protective Extra Low Voltage External 24 V power supply
PoE	Power over Ethernet
QBS	Operator safety acknowledgement signal
RDC	Resolver Digital Converter The resolver digital converter is used to acquire motor data (e.g. position data, motor temperatures).
RDC cool	Resolver Digital Converter Resolver Digital Converter with extended temperature range
SION	Safety Input/Output Node

smartPAD	Programming device for the robot controller The smartPAD has all the operator control and display functions required for operating and programming the manipulator.
SOP	Safe Operation Safety option with software and hardware components for configuring safe monitoring functions in addition to the standard safety functions.
SSD	Solid State Drive Hard drive
PLC	Programmable Logic Controller Used in systems as a higher-level master module in the bus system.
System board	The system board constitutes the control computer. The following models are available: • SYBbasic: “Basic” system board • SYBperf: “Performance” system board The designation “system board” refers to both models unless an explicit distinction is made.
US1	Load voltage (24 V) not switched
US2	Load voltage (24 V) switched. Deactivates actuators, for example, when the drives are deactivated
USB	Universal Serial Bus Bus system for connecting additional devices to a computer
UPS	Uninterruptible power supply

2 Product description

2.1 Description of the industrial robot

The industrial robot consists of the following components:

- Manipulator
- Robot controller
- smartPAD teach pendant
- Connecting cables
- Software
- Options, accessories

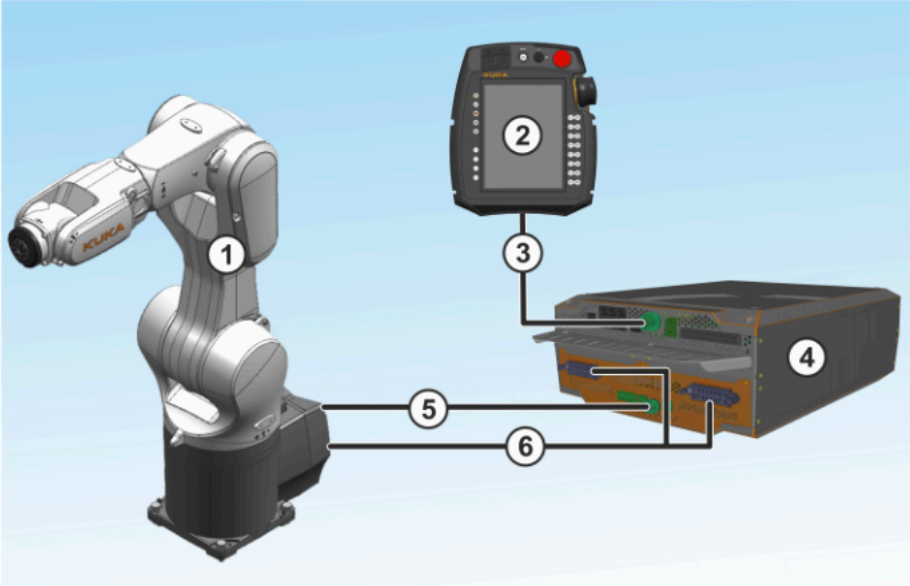

Fig. 2-1: Example of an industrial robot

1 Manipulator
2 Teach pendant, KUKA smartPAD-2
3 Connecting cable / smartPAD
4 Robot controller
5 Connecting cable / data cable
6 Connecting cable / motor cable

2.2 Overview of the robot controller

The robot controller is used for controlling the following systems:

- KUKA small robots

The robot controller consists of the following components:

- Control unit
- Power unit
- Safety logic
- smartPAD teach pendant
- Connection panel

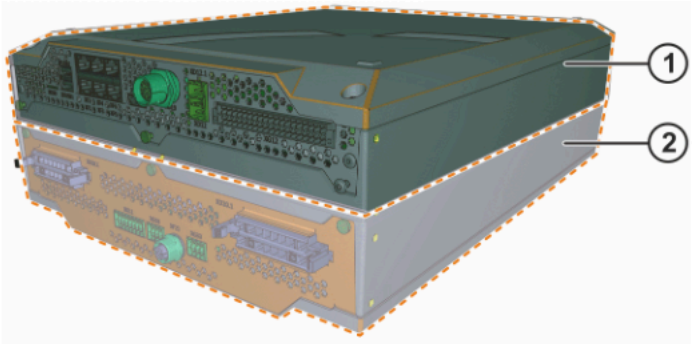

Fig. 2-2: Overview

1 Control unit (control box)
2 Power unit (drive box)

2.2.1 Control box with “Basic” system board

The control box consists of the following components:

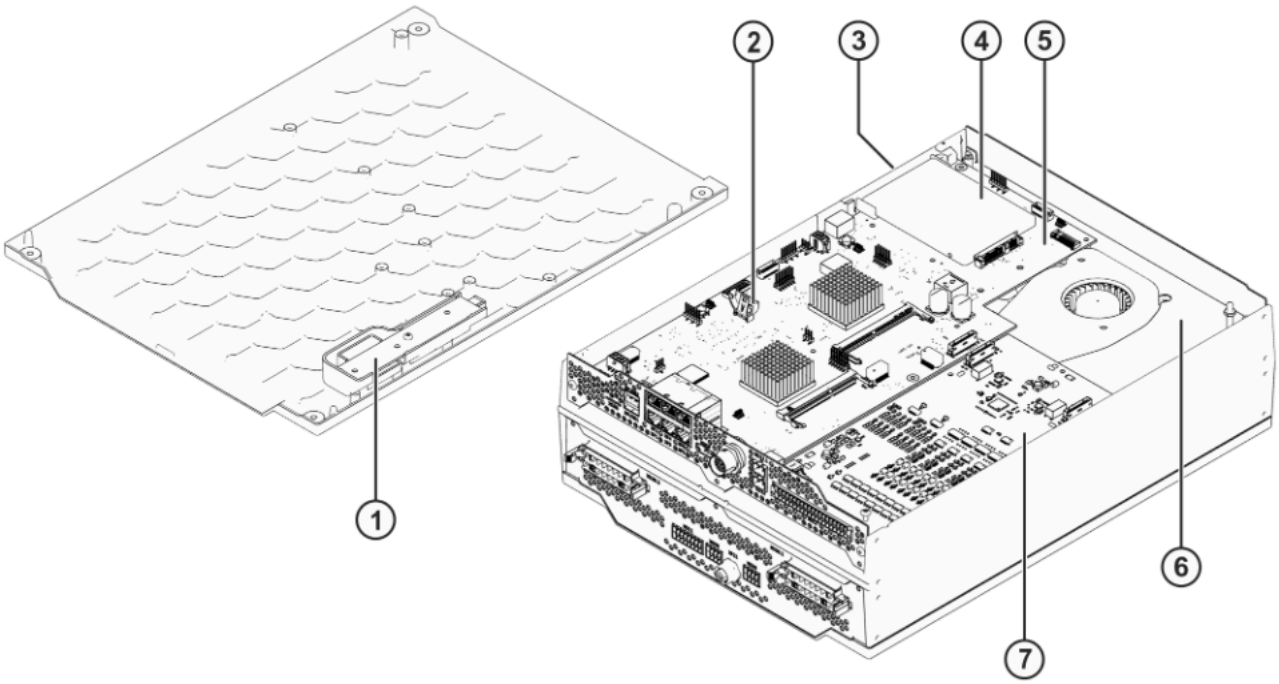

Fig. 2-3: Control box with mini CSP

1 mini CSP
2 Holder for button cell
3 Cover for SSD
4 SSD (optional)
5 System board (“Basic” system board illustrated here)

The system board is connected to the IFBstd interface board via a ribbon cable and to the KSP via the ICT plug connection. The KSP provides the supply voltage of the system board.

6 Control unit carrier plate

7 IFBstd interface board

The IFBstd interface board is supplied with the supply voltage via the system board.

2.2.2 Drive box

WARNING

Danger to life and limb due to opening the power unit
The power unit of the robot controller must not be opened. Death, severe injuries or damage to property may result.

- The power unit of the robot controller must not be opened.

Description

The drive box consists of the following components:

- Fan
- Mains filter (interference suppressor filter) suppresses interference voltages on the power cable
- Brake resistor
- Heat sink
- KSP-300 consisting of:
  - FCU-300
  - SCU-6-1S

Functions

The drive box performs the following functions:

- Generation of the intermediate circuit voltage and system voltage
- Control of the motors
- Control of the brakes
- Checking of intermediate circuit voltage in braking mode

NOTICE

Further information about the interfaces and the connection panels can be found in the “Planning” chapter. (>>> *5.9 "Overview of interfaces" Page 67*)

2.3 Description of interfaces

Overview

The connection panel of the robot controller consists as standard of connections for the following cables:

- Device connection cable
- UPS/battery box
- Motor cable, data cable
- Safety interfaces
- smartPAD cable
- Peripheral cables

Notice

The following safety interfaces are available:

- Discrete safety interface XG11.1

NOTICE

Further information about the interfaces and the connection panels can be found in the “Planning” chapter. (>>> *5.9 "Overview of interfaces" Page 67*)

2.4 Controller System Panel

Description

The Controller System Panel (mini CSP) is the display element for the operating state and is connected to the system board.

Overview

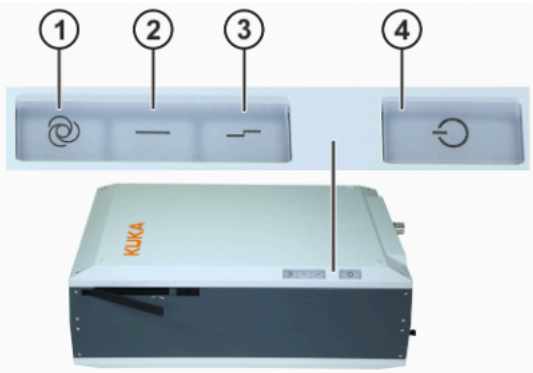

Fig. 2-4: Controller System Panel LED arrangement

Item	Element	Color	Meaning
1	LED1	White	Operating mode LED (Test or Automatic)
2	LED2	Green	Operating status LED
3	LED3	Red	Error LED
4	LED4 “soft power” button	White	Sleep LED

2.5 Cooling

Description

The components of the control and power electronics are cooled with ambient air by 2 fans.

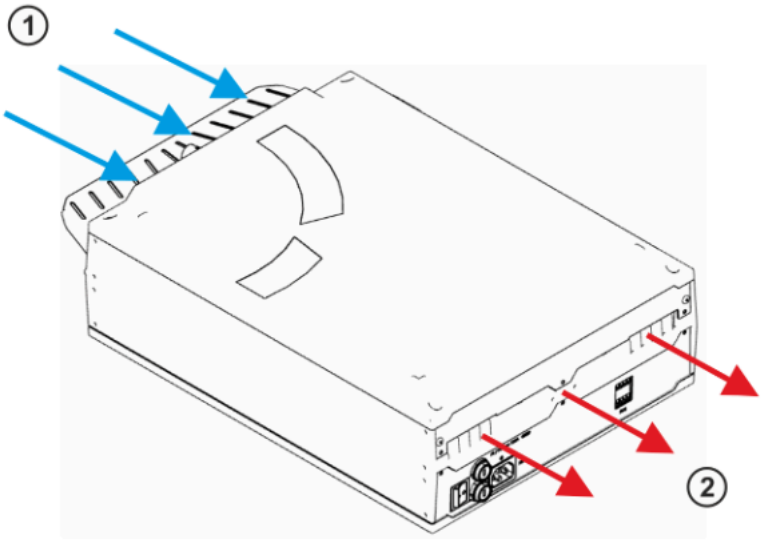

Fig. 2-5: Cooling

1 Air inlet

2 Air outlet

2.6 Intended use and misuse

Use

The robot controller is intended solely for operating the following components:

- KUKA industrial robots

Misuse

Any use or application deviating from the intended use is deemed to be misuse and is not allowed. It will result in the loss of warranty and liability claims. KUKA is not liable for any damage resulting from such misuse. This includes e.g.:

- Use as a climbing aid
- Operation outside the specified operating parameters
- Operation without the required safety equipment
- Transportation of persons and animals
- Outdoor operation.
- Use in a potentially explosive area
- Use in radioactive environments
- Operation in underground mining

3 Safety

3.1 General

3.1.1 Liability

The device described in this document is either an industrial robot or a component thereof.

Components of the industrial robot:

- Manipulator
- Robot controller
- Teach pendant
- Connecting cables
- External axes (optional)
  e.g. linear unit, turn-tilt table, positioner
- Software
- Options, accessories

The industrial robot is built using state-of-the-art technology and in accordance with the recognized safety rules. Nevertheless, misuse of the industrial robot may constitute a risk to life and limb or cause damage to the industrial robot and to other material property.

The industrial robot may only be used in perfect technical condition in accordance with its intended use and only by safety-conscious persons who are fully aware of the risks involved in its operation. Use of the industrial robot is subject to compliance with this document and with the declaration of incorporation supplied together with the industrial robot. Any functional disorders, especially those affecting safety, must be rectified immediately.

Safety information

Information about safety may not be construed against the manufacturer. Even if all safety instructions are followed, this is not a guarantee that the industrial robot will not cause personal injuries or material damage.

No modifications may be carried out to the industrial robot without the authorization of the manufacturer. Unauthorized modifications will result in the loss of warranty and liability claims.

Additional components (tools, software, etc.), not supplied by the manufacturer, may be integrated into the industrial robot. The user is liable for any damage these components may cause to the industrial robot or to other material property.

In addition to the Safety chapter, this document contains further safety instructions. These must also be observed.

3.1.2 EC declaration of conformity and declaration of incorporation

The industrial robot constitutes partly completed machinery as defined by the EC Machinery Directive. The industrial robot may only be put into operation if the following preconditions are met:

- The industrial robot is integrated into a complete system.

  or: The industrial robot, together with other machinery, constitutes a complete system.

  or: All safety functions and safeguards required for operation in the complete machine as defined by the EC Machinery Directive have been added to the industrial robot.
- The complete system complies with the EC Machinery Directive. This has been confirmed by means of a conformity assessment procedure.

EC declaration of conformity

The system integrator must issue an EC declaration of conformity for the complete system in accordance with the Machinery Directive. The EC declaration of conformity forms the basis for the CE mark for the system. The industrial robot must always be operated in accordance with the applicable national laws, regulations and standards.

The robot controller has a CE mark in accordance with the EMC Directive and the Low Voltage Directive.

Declaration of incorporation

The partly completed machinery is supplied with a declaration of incorporation in accordance with Annex II B of the Machinery Directive 2006/42/EC. The assembly instructions and a list of essential requirements complied with in accordance with Annex I are integral parts of this declaration of incorporation.

The declaration of incorporation declares that the start-up of the partly completed machinery is not allowed until the partly completed machinery has been incorporated into machinery, or has been assembled with other parts to form machinery, and this machinery complies with the terms of the EC Machinery Directive, and the EC declaration of conformity is present in accordance with Annex II A.

3.1.3 Terms in the “Safety” chapter

STOP 0, STOP 1 and STOP 2 are the stop definitions according to EN 60204-1:2018.

Term	Description
Axis range	Range of each axis, in degrees or millimeters, within which it may move. The axis range must be defined for each axis.
Stopping distance	Stopping distance = reaction distance + braking distance The stopping distance is part of the danger zone.
Workspace	Area within which the robot may move. The workspace is derived from the individual axis ranges.
User	The user of the industrial robot can be the management, employer or delegated person responsible for use of the industrial robot.
Service life	The service life of a safety-relevant component begins at the time of delivery of the component to the customer. The service life is not affected by whether the component is used or not, as safety-relevant components are also subject to aging during storage.

Danger zone	The danger zone consists of the workspace and the stopping distances of the manipulator and external axes (optional).
KSS	KUKA System Software
KUKA smartPAD	see “smartPAD”
KUKA smartPAD-2	see “smartPAD”
Manipulator	The robot arm and the associated electrical installations
Safety zone	The safety zone is situated outside the danger zone.
Safe operational stop	The safe operational stop is a standstill monitoring function. It does not stop the robot motion, but monitors whether the robot axes are stationary. If these are moved during the safe operational stop, a safety STOP 0 is triggered. The safe operational stop can also be triggered externally. When a safe operational stop is triggered, the robot controller sets an output to the field bus. The output is set even if not all the axes were stationary at the time of triggering, thereby causing a safety STOP 0 to be triggered.
Safety STOP 0	A stop that is triggered and executed by the safety controller. The safety controller immediately switches off the drives and the power supply to the brakes. **Note:** This stop is called safety STOP 0 in this document.
Safety STOP 1	A stop that is triggered and monitored by the safety controller. The braking operation is carried out by the non-safety-oriented section of the robot controller and monitored by the safety controller. As soon as the manipulator has stopped, the safety controller deactivates the drives and the power supply of the brakes. When a safety STOP 1 is triggered, the robot controller sets an output to the field bus. The safety STOP 1 can also be triggered externally. **Note:** This stop is called safety STOP 1 in this document.
Safety STOP 2	A stop that is triggered and monitored by the safety controller. The braking operation is carried out by the non-safety-oriented section of the robot controller and monitored by the safety controller. The drives remain activated and the brakes released. As soon as the manipulator is at a standstill, a safe operational stop is triggered. When a safety STOP 2 is triggered, the robot controller sets an output to the field bus. The safety STOP 2 can also be triggered externally. **Note:** This stop is called safety STOP 2 in this document.
Safety options	Generic term for options which make it possible to configure additional safe monitoring functions in addition to the standard safety functions. Example: SafeOperation

smartPAD	Programming device for the robot controller The smartPAD has all the operator control and display functions required for operating and programming the industrial robot. For robot controllers of the KR C5 series, the model **smartPAD-2** is used. This model has a number of variants, e.g. with different lengths of connecting cables.
Stop category 0	The drives are deactivated immediately and the brakes are applied. The manipulator and any external axes (optional) perform path-oriented braking. **Note:** This stop category is called STOP 0 in this document.
Stop category 1	The manipulator and any external axes (optional) perform path-maintaining braking. • Operating mode T1: the drives are deactivated as soon as the robot has stopped, but no later than after 680 ms. • Operating modes T2, AUT (KSS), AUT EXT (KSS), EXT (VSS): the drives are switched off after 1.5 s. **Note:** This stop category is called STOP 1 in this document.
Stop category 1 – Drive Ramp Stop	The manipulator and any external axes (optional) perform path-oriented braking. • Operating mode T1: the drives are deactivated as soon as the robot has stopped, but no later than after 680 ms. • Operating modes T2, AUT (KSS), AUT EXT (KSS), EXT (VSS): the drives are switched off after 1.5 s. **Note:** This stop category is called STOP 1 - DRS in this document.
Stop category 2	The drives are not deactivated and the brakes are not applied. The manipulator and any external axes (optional) are braked with a path-maintaining braking ramp. **Note:** This stop category is called STOP 2 in this document.
System integrator (plant integrator)	The system integrator is responsible for safely integrating the industrial robot into a complete system and commissioning it.
T1	Test mode, Manual Reduced Velocity (<= 250 mm/s)
T2	Test mode, Manual High Velocity (> 250 mm/s permissible)
VSS	VW System Software
External axis	Axis of motion that does not belong to the manipulator, yet is controlled with the robot controller. e.g. KUKA linear unit, turn-tilt table, Posiflex

3.2 Personnel

The following persons or groups of persons are defined for the industrial robot:

- User
- Personnel

Qualification of personnel
Work on the system must only be performed by personnel that is able to assess the tasks to be carried out and detect potential hazards. Death, severe injuries or damage to property may otherwise result. The following qualifications are required:

- Adequate specialist training, knowledge and experience
- Knowledge of the relevant operating or assembly instructions, knowledge of the relevant standards
- All persons working with the industrial robot must have read and understood the industrial robot documentation, including the safety chapter.

User

The user must observe the labor laws and regulations. This includes e.g.:

- The user must comply with his monitoring obligations.
- The user must carry out briefing at defined intervals.
- The user must comply with the regulations relating to personal protective equipment (PSA).

Personnel

Personnel must be instructed, before any work is commenced, in the type of work involved and what exactly it entails as well as any hazards which may exist. Instruction must be carried out regularly. Instruction is also required after particular incidents or technical modifications.

Personnel includes:

- System integrator
- Operators, subdivided into:
  - Start-up, maintenance and service personnel
  - Operating personnel
  - Cleaning personnel

System integrator

The industrial robot is safely integrated into a complete system by the system integrator.

The system integrator is responsible for the following tasks:

- Installing the industrial robot
- Connecting the industrial robot
- Performing risk assessment
- Implementing the required safety functions and safeguards
- Issuing the EC declaration of conformity
- Attaching the CE mark
- Creating the operating instructions for the system

Operators

The operator must meet the following preconditions:

- The operator must be trained for the work to be carried out.
- Work on the system must only be carried out by qualified personnel. These are people who, due to their specialist training, knowledge and experience, and their familiarization with the relevant standards, are

able to assess the work to be carried out and detect any potential hazards.

3.3 Workspace, safety zone and danger zone

Workspaces are to be restricted to the necessary minimum size. A workspace must be safeguarded using appropriate safeguards.

The safeguards (e.g. safety gate) must be situated inside the safety zone. In the case of a stop, the manipulator and external axes (optional) are braked and come to a stop within the danger zone.

The danger zone consists of the workspace and the stopping distances of the manipulator and external axes (optional). It must be safeguarded by means of physical safeguards to prevent danger to persons or the risk of material damage.

3.3.1 Determining stopping distances

The system integrator's risk assessment may indicate that the stopping distances must be determined for an application. In order to determine the stopping distances, the system integrator must identify the safety-relevant points on the programmed path.

When determining the stopping distances, the robot must be moved with the tool and loads which are also used in the application. The robot must be at operating temperature. This is the case after approx. 1 h in normal operation.

During execution of the application, the robot must be stopped at the point from which the stopping distance is to be calculated. This process must be repeated several times with a safety stop 0 and a safety stop 1. The least favorable stopping distance is decisive.

A safety stop 0 can be triggered by a safe operational stop via the safety interface, for example. If a safety option is installed, it can be triggered, for instance, by a space violation (e.g. the robot exceeds the limit of an activated workspace in Automatic mode).

A safety stop 1 can be triggered by pressing the EMERGENCY STOP device on the smartPAD, for example.

3.4 Triggers for stop reactions: KSS

Stop reactions of the industrial robot are triggered in response to operator actions or as a reaction to monitoring functions and error messages. The following table shows the different stop reactions according to the operating mode that has been set.

Trigger	T1, T2	AUT, AUT EXT
Start key released	STOP 2	-
STOP key pressed	STOP 2	
Drives OFF	STOP 1	
$MOVE_ENABLE input drops out	STOP 2	
Power switched off via main switch or device switch Or power failure	STOP 0	
Internal error in non-safety-oriented part of the robot controller	STOP 0 or STOP 1 (dependent on the cause of the error)	

Trigger	T1, T2	AUT, AUT EXT
Operating mode changed during operation	Safety stop 2	
Safety gate opened (operator safety)	-	Safety stop 1
Enabling switch released (internal or external enabling)	Safety stop 2	-
Internal enabling switch pressed down fully or error	Safety stop 1	-
External enabling switch pressed down fully or error	Safety stop 2	-
E-STOP pressed	Safety stop 1	
Error in safety controller or periphery of the safety controller	Safety stop 0	

* In the KR C5 series, the “pressed down fully” position is not communicated to the robot controller as a specific “panic position” signal for external enabling, but only as “enabling not present”. This triggers a safety stop 2.

3.5 Triggers for stop reactions: VSS

Stop reactions of the industrial robot are triggered in response to operator actions or as a reaction to monitoring functions and error messages. The following table shows the different stop reactions according to the operating mode that has been set.

Trigger	T1, T2	EXT
Start key released	STOP 2	-
STOP key pressed	STOP 2	
Drives OFF	STOP 1	
Power switched off via main switch or device switch Or power failure	STOP 0	
Internal error in non-safety-oriented part of the robot controller	STOP 0 or STOP 1 (dependent on the cause of the error)	
Operating mode changed during operation	Safety stop 2	
Safety gate opened (operator safety)	-	Safety stop 1
Enabling switch released (internal or external enabling)	Safety stop 2	-
Internal enabling switch pressed down fully or error	Safety stop 1	-
External enabling switch pressed down fully or error	Safety stop 2	-
E-STOP pressed	Safety stop 1	
Error in safety controller or periphery of the safety controller	Safety stop 0	

* In the KR C5 series, the “pressed down fully” position is not communicated to the robot controller as a specific “panic position” signal for external enabling, but only as “enabling not present”. This triggers a safety stop 2.

3.6 Safety functions

3.6.1 Overview of the safety functions

The following safety functions are present in the industrial robot:

- Operating mode selection
- Operator safety (= connection for the monitoring of physical safeguards)
- EMERGENCY STOP device
- Enabling device
- Velocity monitoring in T1

The safety functions of the industrial robot meet the following requirements:

- **Category 3** and **Performance Level d** in accordance with EN ISO 13849-1

The requirements are only met on the following condition, however:

- The EMERGENCY STOP device is pressed at least once every 12 months.
- The enabling device is checked at least once every 12 months.
  (>>> *"Function test" Page 30*)

DANGER

Risk of fatal injury due to non-operational safety functions or external safeguards
In the absence of operational safety functions or safeguards, the industrial robot can cause death, severe injuries or damage to property.

- If safety functions or safeguards are dismantled or deactivated, do not operate the industrial robot.

Integrate industrial robot into safety system of the overall system
During system planning, the safety functions of the overall system must be planned and designed. Death, severe injuries or damage to property may otherwise result.

- The industrial robot must be integrated into the safety system of the overall system.

3.6.2 Safety controller

The safety controller is a unit inside the control PC. It links safety-relevant signals and safety-relevant monitoring functions.

Safety controller tasks:

- Switching off the drives; applying the brakes
- Monitoring the braking ramp
- Standstill monitoring (after the stop)
- Velocity monitoring in T1
- Evaluation of safety-relevant signals
- Setting of safety-oriented outputs

3.6.3 Operating mode selection: KSS

Operating modes

The industrial robot can be operated in the following modes:

- Manual Reduced Velocity (T1)
- Manual High Velocity (T2)
- Automatic (AUT)
- Automatic External (AUT EXT)

Do not change the operating mode while a program is running. If the operating mode is changed during program execution, the industrial robot is stopped with a safety stop 2.

Operating mode	Use	Velocities
T1	For test operation, programming and teaching	• Program verification: Programmed velocity, maximum 250 mm/s • Jog mode: Jog velocity, maximum 250 mm/s
T2	For test operation	• Program verification: Programmed velocity • Jog mode: Not possible
AUT	For industrial robots without higher-level controllers	• Program operation: Programmed velocity • Jog mode: Not possible
AUT EXT	For industrial robots with higher-level controllers, e.g. PLC	• Program operation: Programmed velocity • Jog mode: Not possible

Mode selector switch

The user can change the operating mode via the connection manager. The connection manager is a view that is called by means of the mode selector switch on the smartPAD.

The mode selector switch may be one of the following variants:

- With key

  It is only possible to change operating mode if the key is inserted.
- Without key

WARNING

Danger to life and limb due to mode selector switch without access restriction
If the smartPAD is equipped with a mode selector switch without a key, all persons can operate the mode selector switch, irrespective of their field of activity or qualifications. Death, severe injuries or damage to property may result.

- An additional device must be installed to ensure that the mode selector switch can only be operated by a restricted group of people.
- The device itself must not trigger motions of the industrial robot or other hazards.

3.6.4 Operating mode selection: VSS

Operating modes

The industrial robot can be operated in the following modes:

- Manual Reduced Velocity (T1)
- Manual High Velocity (T2)
- Automatic External (EXT)

Do not change the operating mode while a program is running. If the operating mode is changed during program execution, the industrial robot is stopped with a safety stop 2.

Operating mode	Use	Velocities
T1	For test operation, programming and teaching	• Program verification: Programmed velocity, maximum 250 mm/s • Jog mode: Jog velocity, maximum 250 mm/s
T2	For test operation	• Program verification: Programmed velocity • Jog mode: Not possible
EXT	For industrial robots with higher-level controllers, e.g. PLC	• Program operation: Programmed velocity • Jog mode: Not possible

Mode selector switch

The user can change the operating mode via the connection manager. The connection manager is a view that is called by means of the mode selector switch on the smartPAD.

Bypassing

In order to be able to move the manipulator in operating mode T1 or T2 with the safety gate open, the following keys are available:

Active key	Authorization
E2/E22	Authorization to move in T1 with the safety gate open
E2/E22 and E7	Authorization to move in T2 with the safety gate open

WARNING

Danger to life and limb of persons in danger zone in T2
In T2, the robot moves at the programmed velocity. Death, severe injuries or damage to property may result.

- There must be no persons in the danger area.

Use E keys in a safety-conscious manner
Keys E2/E22 and E7 must be used in a safety-conscious manner. Death, severe injuries or damage to property may otherwise result.

- It is the responsibility of the user or system integrator to determine which key may be used and when. The applicable laws, regulations and standards must be taken into consideration.
- The keys may only be used by qualified personnel.

Active key	Safety gate	Jogging possible?		Program execution possible?	
		T1	T2	T1	T2
No key active	Open	No	No	No	No
	Closed	Yes	No	Yes	Yes
E2/E22	Open	Yes	No	Yes	No
	Closed	No	No	No	No
E2/E22 and E7	Open	Yes	No	No	Yes
	Closed	No	No	No	No

3.6.5 “Operator safety” signal: KSS

The “operator safety” signal is used for monitoring physical safeguards, e.g. safety gates. Automatic operation is not possible without this signal. In the event of a loss of signal during automatic operation (e.g. safety gate is opened), the manipulator stops with a safety stop 1.

Operator safety is not active in modes T1 (Manual Reduced Velocity) and T2 (Manual High Velocity).

WARNING

Danger to life and limb due to resumed automatic operation without adequate acknowledgement
Following loss of the “Operator safety” signal, it must not be possible to restart automatic operation by merely closing the safeguard. Otherwise, for example, the safety gate could close unintentionally, thereby causing automatic operation to resume while there are persons in the danger zone. Death, severe injuries or damage to property may result.

- Automatic operation must not be resumed until the safeguard has been closed and the closing has been acknowledged.
- The acknowledgement must be designed in such a way that an actual check of the danger zone can be carried out first. Other acknowledgement functions (e.g. an acknowledgement which is automatically triggered by closure of the safeguard) are not permitted.

3.6.6 “Operator safety” signal: VSS

The “Operator safety” signal is used for monitoring physical safeguards, e.g. safety gates. Automatic operation is not possible without this signal. In the event of a loss of signal during automatic operation (e.g. safety gate is opened), the manipulator stops with a safety stop 1.

In Manual Reduced Velocity (T1) mode, operator safety can be bypassed with the E2/E22 key.

In Manual High Velocity (T2) mode, operator safety can be bypassed with the E2/E22+E7 key.

WARNING

Danger to life and limb due to resumed automatic operation without adequate acknowledgement

Following loss of the “Operator safety” signal, it must not be possible to restart automatic operation by merely closing the safeguard. Otherwise, for example, the safety gate could close unintentionally, thereby causing automatic operation to resume while there are persons in the danger zone. Death, severe injuries or damage to property may result.

- Automatic operation must not be resumed until the safeguard has been closed and the closing has been acknowledged.
- The acknowledgement must be designed in such a way that an actual check of the danger zone can be carried out first. Other acknowledgement functions (e.g. an acknowledgement which is automatically triggered by closure of the safeguard) are not permitted.

3.6.7 EMERGENCY STOP device

The EMERGENCY STOP device for the industrial robot is the EMERGENCY STOP device on the smartPAD. The device must be pressed in the event of a hazardous situation or emergency.

Reactions of the industrial robot if the EMERGENCY STOP device is pressed:

- The manipulator and any external axes (optional) are stopped with a safety stop 1.

Before operation can be resumed, the EMERGENCY STOP device must be turned to release it.

WARNING

Danger to life and limb due to tools and equipment without EMERGENCY STOP

If tools and other equipment connected to the robot are not integrated into the EMERGENCY STOP circuit, this can result in death, severe injuries or damage to property.

- Integrate tools and other equipment into the EMERGENCY STOP circuit if they could constitute a potential hazard.

There must always be at least one external EMERGENCY STOP device installed. This ensures that an EMERGENCY STOP device is available even when the smartPAD is disconnected.

(>>> *3.6.9 "External EMERGENCY STOP device" Page 29*)

3.6.8 Logging off from the higher-level safety controller

If the robot controller is connected to a higher-level safety controller, this connection will inevitably be terminated in the following cases:

- Switching off the voltage via the main switch or device switch of the robot controller

  Or power failure
- Shutdown of the robot controller via the smartHMI
- Activation of a WorkVisual project in WorkVisual or directly on the robot controller
- Changes to **Start-up** > **Network configuration**
- Changes to **Configuration** > **Safety configuration**
- **I/O drivers** > **Reconfigure**
- Restoration of an archive

Effect of the interruption:

- If a discrete safety interface is used, this triggers an EMERGENCY STOP for the overall system.
- If the Ethernet interface is used, the KUKA safety controller generates a signal that prevents the higher-level controller from triggering an EMERGENCY STOP for the overall system.

Take Ethernet safety interface into consideration in risk assessment
Failure to take the Ethernet safety interface into consideration in the risk assessment may result in death, severe injuries or damage to property.

- In his risk assessment, the system integrator must take into consideration whether the fact that switching off the robot controller does not trigger an EMERGENCY STOP of the overall system could constitute a hazard and, if so, how this hazard can be countered.

WARNING

Danger to life and limb due to smartPAD on controller that has been switched off
If a robot controller is switched off, the EMERGENCY STOP device on the smartPAD is not operational. There is a risk of operational and non-operational EMERGENCY STOP devices becoming interchanged.
Death, severe injuries or damage to property may result.

- Cover smartPADs on controllers that have been switched off or remove them from the system.

3.6.9 External EMERGENCY STOP device

Every operator station that can initiate a robot motion or other potentially hazardous situation must be equipped with an EMERGENCY STOP device. The system integrator is responsible for ensuring this.

There must always be at least one external EMERGENCY STOP device installed. This ensures that an EMERGENCY STOP device is available even when the smartPAD is disconnected.

External EMERGENCY STOP devices are connected via the customer interface. External EMERGENCY STOP devices are not included in the scope of supply of the industrial robot.

3.6.10 Enabling device

The enabling devices of the industrial robot are the enabling switches on the smartPAD.

For robot controllers of the KR C5 series, the model **smartPAD-2** is used. It has 4 enabling switches.

The enabling switches have 3 positions:

- Not pressed
- Center position
- Fully pressed (panic position)

In the test modes, the manipulator can only be moved if at least one of the enabling switches is held in the center position.

It is possible to hold several enabling switches in the center position simultaneously. This makes it possible to adjust grip from one enabling switch to another one.

In the test modes, the manipulator can be stopped in the following ways:

- Press at least one enabling switch down fully.

  Pressing an enabling switch down fully triggers a safety stop 1.
- Or release all enabling switches.

  Releasing all (!) enabling switches held in the center position triggers a safety stop 2.

WARNING

Danger to life and limb due to lack of reaction when an enabling switch is released

Releasing one of multiple enabling switches held in the center position does not trigger a stop reaction.

If multiple switches are held in the center position, the robot controller cannot distinguish whether one of them was intentionally released or if it was unintentionally released as the result of an accident.

- Create awareness for the hazard.

If an enabling switch malfunctions (e.g. jams in the center position), the industrial robot can be stopped using one of the following methods:

- Press another enabling switch down fully.
- Actuate the EMERGENCY STOP device.
- Release the Start key.

WARNING

Danger to life and limb due to manipulation of enabling switches

The enabling switches must not be held down by adhesive tape or other means or tampered with in any other way. Death, severe injuries or damage to property may result.

- Carry out a visual inspection of the enabling switches.
- Rectify tampering or remove any foreign bodies.

Function test

The function of the enabling switches must be tested in the following cases:

- Following initial start-up or recommissioning of the industrial robot
- After a software update
- After disconnecting and reconnecting a smartPAD (the same smartPAD or another one)
- The test must be carried out at least once every 12 months.

To test, perform the following steps separately for each enabling switch:

1. Move the manipulator in a test mode.
2. While the manipulator is moving, press the enabling switch down fully and hold it down for 3 seconds.

The test is passed in the following case:

- The manipulator stops.
- And: No error message for the enabling device is displayed (*Enabling switch error* or similar).

If the test has not been passed for one or more enabling switches, the smartPAD must be exchanged and the test must be performed again.

3.6.11 External enabling device

External enabling devices are required if it is necessary for more than one person to be in the danger zone of the industrial robot.

The function of the external enabling switches must be tested at least once every 12 months.

Which interface can be used for connecting external enabling devices is described in the “Planning” chapter of the robot controller operating instructions and assembly instructions.

External enabling devices are not included in the scope of supply of the industrial robot.

3.6.12 Velocity monitoring in T1

The axis-specific velocity is safely monitored in T1 mode.

The Cartesian velocity is safely monitored in T1 if the associated setting is activated in the safety configuration.

Axis-specific monitoring

If an axis exceeds its velocity limit, a safety stop 0 is triggered.

- Default limit value for rotational axes: 30°/s
- Default limit value for linear axes: 250 mm/s

The axis-specific monitoring can be configured via the parameter **Maximum velocity T1**. Further information about this can be found in the **Operating and Programming Instructions for System Integrators** documentation for the System Software.

Cartesian monitoring

The Cartesian monitoring refers to the velocity at the flange. If a limit value is exceeded, a safety stop 0 is triggered.

- Default limit value: 250 mm/s

If an additional safety option (e.g. SafeOperation) is used, the limit value can be configured. It can be reduced, but not increased.

3.7 Additional protective equipment

3.7.1 Jog mode

In the operating modes T1 (Manual Reduced Velocity) and T2 (Manual High Velocity), the robot controller can only execute programs in jog mode. This means that it is necessary to hold down an enabling switch and the Start key in order to execute a program.

- Releasing the enabling switch triggers a safety stop 2.
- Pressing the enabling switch down fully (panic position) triggers a safety stop 1.
- Releasing the Start key triggers a STOP 2.

3.7.2 Software limit switches

The axis ranges of all manipulator and positioner axes are limited by means of adjustable software limit switches. These software limit switches only serve as machine protection and must be adjusted in such a way that the manipulator/positioner cannot hit the mechanical end stops.

The software limit switches are set during commissioning of an industrial robot.

Further information is contained in the operating and programming instructions.

3.7.3 Mechanical end stops

Depending on the robot variant, the axis ranges of the main and wrist axes of the manipulator are partially limited by mechanical end stops.

Additional mechanical end stops can be installed on the external axes.

WARNING

Danger to life and limb following collision with obstacle
If the manipulator or an external axis hits an obstruction or a mechanical end stop or mechanical axis limitation, the manipulator can no longer be operated safely. Death, injuries or damage to property may result.

- Put manipulator out of operation.
- KUKA must be consulted before it is put back into operation.

3.7.4 Mechanical axis limitation (optional)

Some manipulators can be fitted with mechanical axis limitation systems in axes A1 to A3. The axis limitation systems restrict the working range to the required minimum. This increases personal safety and protection of the system.

In the case of manipulators that are not designed to be fitted with mechanical axis limitation, the workspace must be laid out in such a way that there is no danger to persons or material property, even in the absence of mechanical axis limitation.

If this is not possible, the workspace must be limited by means of photoelectric barriers, photoelectric curtains or obstacles on the system side. There must be no shearing or crushing hazards at the loading and transfer areas.

This option is not available for all robot models. Information on specific robot models can be obtained from the manufacturer.

3.7.5 Options for moving the manipulator without drive energy

Qualification of personnel with regard to behavior in emergency situations
In emergencies or other exceptional situations, it may be necessary to move the manipulator without drive energy.

- Personnel must be trained in how to move the manipulator without drive energy.

Description

The following options are available for moving the manipulator without drive energy after an accident or malfunction:

- Release device (optional)

  The release device can be used for the main axis drive motors and, depending on the robot variant, also for the wrist axis drive motors.
- Brake release device (option)

  The brake release device is designed for robot variants whose motors are not freely accessible.
- Moving the wrist axes directly by hand

  There is no release device available for the wrist axes of variants in the low payload category. This is not necessary because the wrist axes can be moved directly by hand.

Information about the options available for the various robot models and about how to use them can be found in the assembly and operating instructions for the robot or can be requested from the manufacturer.

NOTICE

Damage to property due to moving the manipulator without drive energy
Moving the manipulator without drive energy can damage the motor brakes of the axes concerned.

- Only move the manipulator without drive energy in emergencies, e.g. for rescuing persons.
- The motor must be replaced if the brake has been damaged.

3.7.6 Labeling on the industrial robot

All plates, labels, symbols and marks constitute safety-relevant parts of the industrial robot. They must not be modified or removed.

Labeling on the industrial robot consists of:

- Identification plates
- Warning signs
- Safety symbols
- Designation labels
- Cable markings
- Rating plates

Further information is contained in the technical data of the operating instructions or assembly instructions of the components of the industrial robot.

3.7.7 External safeguards

The access of persons to the danger zone of the industrial robot must be prevented by means of safeguards. It is the responsibility of the system integrator to ensure this.

Physical safeguards must meet the following requirements:

- They meet the requirements of EN ISO 14120.
- They prevent access of persons to the danger zone and cannot be easily circumvented.
- They are sufficiently fastened and can withstand all forces that are likely to occur in the course of operation, whether from inside or outside the enclosure.
- They do not, themselves, represent a hazard or potential hazard.
- Prescribed clearances, e.g. to danger zones, are adhered to.

Safety gates (maintenance gates) must meet the following requirements:

- They are reduced to an absolute minimum.
- The interlocks (e.g. safety gate switches) are linked to the operator safety input of the robot controller via safety gate switching devices or safety PLC.
- Switching devices, switches and the type of switching conform to the requirements of Performance Level d and category 3 according to EN ISO 13849-1.
- Depending on the risk situation: the safety gate is additionally safeguarded by means of a locking mechanism that only allows the gate to be opened if the manipulator is safely at a standstill.
- The button for acknowledging the safety gate is located outside the space limited by the safeguards.

Further information is contained in the corresponding standards and regulations. These also include EN ISO 14120.

Other safety equipment

Other safety equipment must be integrated into the system in accordance with the corresponding standards and regulations.

3.8 Overview of operating modes and safety functions: KSS

The following table indicates the operating modes in which the safety functions are active.

Safety functions	T1	T2	AUT	AUT EXT
Operator safety	-	-	Active	Active
EMERGENCY STOP device	Active	Active	Active	Active
Enabling device	Active	Active	-	-
Reduced velocity during program verification	Active	-	-	-
Jog mode	Active	Active	-	-
Software limit switches	Active	Active	Active	Active

3.9 Overview of operating modes and safety functions: VSS

The following table indicates the operating modes in which the safety functions are active.

Safety measures	T1	T2	EXT
Operator safety	active *	active **	active
EMERGENCY STOP device	active	active	active
Enabling device	active	active	-
Reduced velocity during program verification	active	-	-
Jog mode	active	active	-
Software limit switches	active	active	active

* In T1 mode, operator safety can be bypassed with the E2/E22 key.

** In T2 mode, operator safety can be bypassed with the E2/E22+E7 key.

3.10 Safety measures

3.10.1 General safety measures

The industrial robot may only be used in perfect technical condition in accordance with its intended use and only by safety-conscious persons. Operator errors can result in personal injury and damage to property.

It is important to be prepared for possible movements of the industrial robot even after the robot controller has been switched off and locked out. Incorrect installation (e.g. overload) or mechanical defects (e.g. brake defect) can cause the manipulator or external axes to sag. If work is to be carried out on a switched-off industrial robot, the manipulator and external axes must first be moved into a position in which they are unable to move on their own, whether the payload is mounted or not. If this is not possible, the manipulator and external axes must be secured by appropriate means.

DANGER

Risk of fatal injury due to non-operational safety functions or external safeguards

In the absence of operational safety functions or safeguards, the industrial robot can cause death, severe injuries or damage to property.

- If safety functions or safeguards are dismantled or deactivated, do not operate the industrial robot.

DANGER

Danger to life and limb of persons under the robot arm

Sagging or falling parts can cause death or serious injuries. This applies at all times, e.g. also for assembly tasks or with the controller switched off.

- Never loiter under the robot arm.

CAUTION

Risk of burns from hot motors
The motors reach temperatures during operation which can cause burns.

- Avoid contact.
- Take appropriate safety precautions, e.g. wear protective gloves.

smartPAD

The user must ensure that the industrial robot is only operated with the smartPAD by authorized persons.

If more than one smartPAD is used in the overall system, it must be ensured that it is clearly recognizable which smartPAD is connected to which industrial robot. They must not be interchanged.

WARNING

Danger to life and limb due to disconnected smartPAD
If a smartPAD is disconnected, its EMERGENCY STOP device is not operational. There is a risk of connected and disconnected smartPADs being interchanged. Death, injuries or damage to property may result.

- Remove the disconnected smartPAD from the system immediately.
- Store the disconnected smartPAD out of sight and reach of personnel working on the industrial robot.

The enabling switches on the smartPAD must be subjected to a function test at least once every 12 months and in certain specific cases.

(>>> *"Function test" Page 30*)

Modifications

After modifications to the industrial robot, checks must be carried out to ensure the required safety level. The valid national or regional work safety regulations must be observed for this check. The correct functioning of all safety functions must also be tested.

New or modified programs must always be tested first in Manual Reduced Velocity mode (T1).

After modifications to the industrial robot, existing programs must always be tested first in Manual Reduced Velocity mode (T1). This applies to all components of the industrial robot and includes e.g. modifications of the external axes or to the software and configuration settings.

Faults

The following tasks must be carried out in the case of faults in the industrial robot:

- Switch off the robot controller and secure it (e.g. with a padlock) to prevent unauthorized persons from switching it on again.
- Indicate the fault by means of a label with a corresponding warning (tagout).
- Keep a record of the faults.
- Eliminate the fault and carry out a function test.

3.10.2 IT security

KUKA products must only be used in perfect technical condition in accordance with their intended use and only by safety-conscious persons.

In particular, safety-conscious use includes being operated in an IT environment which meets the current security-relevant standards and for which there is an overall concept for IT security.

Take measures to ensure IT security
IT security involves not only aspects of information and data processing as such, but also affects at least the following areas:

- Technology, organization, personnel, infrastructure

KUKA urgently recommends that users implement an information security management system for their products which designs, coordinates and monitors the tasks related to information security.

Sources for information about IT security for companies include:

- Independent consulting firms
- National cyber security authorities

National authorities often make their recommendations available on the Internet. In addition to their official language, some national authorities provide their information in English.

3.10.3 Transportation

Manipulator

The prescribed transport position of the manipulator must be observed. Transportation must be carried out in accordance with the operating instructions or assembly instructions of the robot.

Avoid vibrations and impacts during transportation in order to prevent damage to the manipulator.

Robot controller

The prescribed transport position of the robot controller must be observed. Transportation must be carried out in accordance with the operating instructions or assembly instructions of the robot controller.

Avoid vibrations and impacts during transportation in order to prevent damage to the robot controller.

External axis (optional)

The prescribed transport position of the external axis (e.g. KUKA linear unit, turn-tilt table, positioner) must be observed. Transportation must be carried out in accordance with the operating instructions or assembly instructions of the external axis.

3.10.4 Start-up and recommissioning: KSS/VSS

KSS only:

Changing default passwords
The KUKA System Software is supplied with default passwords for the user groups. If the passwords are not changed, this enables unauthorized persons to log on.

- Before start-up, change the passwords for the user groups.
- Only communicate the passwords to authorized personnel.

KSS and VSS:

Before starting up systems and devices for the first time, a check must be carried out to ensure that the systems and devices are complete and operational, that they can be operated safely and that any damage is detected.

The valid national or regional work safety regulations must be observed for this check. The correct functioning of all safety functions must also be tested.

WARNING

Danger to life and limb due to incorrectly assigned cables
The robot controller is preconfigured for the specific industrial robot. The manipulator and other components can receive incorrect data if they are connected to a different robot controller. Death, severe injuries or damage to property may result.

- Only connect the manipulator to the corresponding robot controller.

WARNING

Risk of fatal injury due to non-configured external axes
The robot controller cannot detect an external axis that is physically connected, but not configured correctly in the software. It cannot exert any torque nor any holding torque on this external axis. If the brakes release, uncontrolled motion can occur at this external axis as a result. Death, severe injuries or damage to property may result.

- Ensure that external axes are correctly configured before an enabling switch is pressed and the brakes are thus released.

Do not impair safety functions
Additional components (e.g. cables and hoses) not supplied by KUKA may be integrated into the industrial robot. If the safety functions are not taken into consideration, this may result in death, severe injuries or damage to property.

- Additional components must not impair or disable safety functions.

NOTICE

Damage to property due to condensation
If the internal cabinet temperature of the robot controller differs greatly from the ambient temperature, condensation can form. This may result in damage to property.

- Wait until the internal cabinet temperature has adapted to the ambient temperature in order to avoid condensation.

Function test

The following tests must be carried out before start-up and recommissioning:

General test:

It must be ensured that:

- The industrial robot is correctly installed and fastened in accordance with the specifications in the documentation.
- There is no damage to the robot that could be attributed to external forces.

WARNING

Danger to life and limb resulting from external forces
External forces, such as an impact or a collision, can cause non-visible damage. For example, it can lead to a gradual loss of drive power from the motor, resulting in unintended movements of the manipulator.
Death, severe injuries or damage to property may result from non-visible damage.

- Check the robot for damage that could have been caused by external forces, e.g. dents or abrasion of paintwork.

  Check the motor and counterbalancing system particularly carefully.
- In the case of damage, the affected components must be exchanged.

- There are no foreign bodies or defective or loose parts on the industrial robot.
- All required safety equipment is correctly installed and operational.
- The power supply ratings of the industrial robot correspond to the local supply voltage and mains type.
- The ground conductor and the equipotential bonding cable are sufficiently rated and correctly connected.
- The connecting cables are correctly connected and the connectors are locked.

Test of the safety functions:

A function test must be carried out for the following safety functions to ensure that they are functioning correctly:

- Local EMERGENCY STOP device
- External EMERGENCY STOP device (input and output)
- Enabling device (in the test modes)
- Operator safety
- All other safety-relevant inputs and outputs used
- Other external safety functions

3.10.4.1 Checking machine data and safety configuration

WARNING

Danger to life and limb due to incorrect data
The industrial robot must not be moved if incorrect machine data or an incorrect controller configuration are loaded. Unforeseeable reactions may occur. Death, severe injuries or damage to property may result.

- Only operate industrial robots with correct data.

- Following the start-up procedure, the practical tests for the machine data must be carried out. The tool must be calibrated (either via an actual calibration or through numerical entry of the data).
- Following modifications to the machine data, the safety configuration must be checked.
- After activation of a WorkVisual project on the robot controller, the safety configuration must be checked.

- If machine data are adopted when checking the safety configuration (regardless of the reason for the safety configuration check), the practical tests for the machine data must be carried out.
- If the activation code of the safety configuration has changed, the safe axis monitoring functions must be checked.

Information about checking the safety configuration and the safe axis monitoring functions is contained in the Operating and Programming Instructions for System Integrators.

If the practical tests are not successfully completed in the initial start-up, KUKA Deutschland GmbH must be contacted.

If the practical tests are not successfully completed during a different procedure, the machine data and the safety-relevant controller configuration must be checked and corrected.

General practical test

If practical tests are required for the machine data, this test must always be carried out.

For 6-axis robots:

The following methods are available for performing the practical test:

- TCP calibration with the XYZ 4-point method

  The practical test is passed if the TCP has been successfully calibrated.

Or:

1. Align the TCP with a freely selected point. The point serves as a reference point.
   - The point must be located so that reorientation is possible.
   - The point must not be located on the Z axis of the FLANGE coordinate system.
2. Move the TCP manually at least 45° once in each of the A, B and C directions.

   The movements do not have to be accumulative, i.e. after motion in one direction it is possible to return to the original position before moving in the next direction.

   The practical test is passed if the TCP does not deviate from the reference point by more than 2 cm in total.

For palletizing robots:

Palletizing robots, in this case, are either robots that can be used only as palletizers from the start or robots operated in palletizing mode. The latter must also be in palletizing mode during the practical test.

First part:

1. Mark the starting position of the TCP.

   Also read and note the starting position from the **Actual position – Cartesian** display on the smartHMI.
2. Jog the TCP in the X direction. The distance must be at least 20% of the robot's maximum reach. Determine the exact length via the **Actual position** display.
3. Measure the distance covered and compare it with the distance value displayed on the smartHMI. The deviation must be < 5%.
4. Repeat steps 1 and 2 for the Y direction and Z direction.

The first part of the practical test is passed if the deviation is < 5% in every direction.

Second part:

- Rotate the tool manually about A by 45°: once in the plus direction, once in the minus direction. At the same time, observe the TCP.

The second part of the practical test is passed if the position of the TCP in space is not altered during the rotations.

Practical test for axes that are not mathematically coupled

If practical tests are required for the machine data, this test must be carried out when axes are present that are not mathematically coupled.

1. Mark the starting position of the axis that is not mathematically coupled.

   Also read and note the start position from the **Actual position** display on the smartHMI.
2. Move the axis manually by a freely selected path length. Determine the path length from the **Actual position** display.
   - Move linear axes a specific distance.
   - Move rotational axes through a specific angle.
3. Measure the length of the path covered and compare it with the value displayed on the smartHMI.

   The practical test is passed if the values differ by no more than 5%.
4. Repeat the test for each axis that is not mathematically coupled.

Practical test for robot on ROBROOT kinematic system

If practical tests are required for the machine data, this test must be carried out if the robot is mounted on a mathematically coupled ROBROOT kinematic system, e.g. on a KL.

- Move the axes of the ROBROOT kinematic system manually in Cartesian mode, individually and one after the other.

  The practical test is passed if the TCP does not move at the same time.

Practical test for couplable axes

If practical tests are required for the machine data, this test must be carried out when axes are present that can be physically coupled and uncoupled, e.g. a servo gun.

1. Physically uncouple the couplable axis.
2. Move all the remaining axes individually.

   The practical test is passed if it has been possible to move all the remaining axes.

3.10.4.2 Start-up mode

Description

The industrial robot can be set to Start-up mode via the smartHMI user interface. In this mode, the manipulator can be moved in T1 without the external safeguards being put into operation.

The safety interface used affects “Start-up” mode:

- **Discrete safety interface**

  Start-up mode is always possible.

- **Ethernet safety interface**
  The robot controller prevents or terminates Start-up mode if a connection to a higher-level safety system exists or is established.

Effect

When the Start-up mode is activated, all outputs are automatically set to the state “logic zero”.

If the robot controller has a peripheral contactor (US2), and if the safety configuration specifies for this to switch in accordance with the motion enable, then the same also applies in Start-up mode. This means that if motion enable is present, the US2 voltage is switched on – even in Start-up mode.

The maximum number of switching cycles of the peripheral contactors is 175 per day.

Hazards

Possible hazards and risks involved in using Start-up mode:

- A person walks into the manipulator’s danger zone.
- In a hazardous situation, a disabled external EMERGENCY STOP device is actuated and the manipulator is not shut down.

Additional measures for avoiding risks in Start-up mode:

- Cover disabled EMERGENCY STOP devices or attach a warning sign indicating that the EMERGENCY STOP device is out of operation.
- If there is no safety fence, other measures must be taken to prevent persons from entering the manipulator’s danger zone, e.g. use of warning tape.

Use

Intended use of Start-up mode:

- Start-up in T1 mode when the external safeguards have not yet been installed or put into operation. The danger zone must be delimited at least by means of warning tape.
- Fault localization (periphery fault).
- Use of Start-up mode must be minimized as much as possible.

WARNING

Risk of fatal injury due to non-operational external safeguards
Use of Start-up mode disables all external safeguards. Death, severe injuries or damage to property may result.

- There must be no persons in the danger zone of the manipulator while it is in Start-up mode.

Misuse

Any use or application deviating from the intended use is deemed to be misuse and is not allowed. It will result in the loss of warranty and liability claims. KUKA is not liable for any damage resulting from such misuse.

3.10.5 Manual mode

General

Manual mode is the mode for setup work. Setup work is all the tasks that have to be carried out on the industrial robot to enable automatic operation. Setup work includes:

- Jog mode
- Teaching
- Programming
- Program verification

The following must be taken into consideration in manual mode:

- New or modified programs must always be tested first in Manual Reduced Velocity mode (T1).
- The manipulator, tooling or external axes (optional) must never touch or project beyond the safety fence.
- Workpieces, tooling and other objects must not become jammed as a result of the industrial robot motion, nor must they lead to short-circuits or be liable to fall off.
- All setup work must be carried out, where possible, from outside the safeguarded area.

Setup work in T1

If it is necessary to carry out setup work from inside the safeguarded area, the following must be taken into consideration in the operating mode **Manual Reduced Velocity (T1)**:

- If it can be avoided, there must be no other persons inside the safeguarded area.
- If it is necessary for there to be several persons inside the safeguarded area, the following must be observed:
  - Each person must have an enabling device.
  - All persons must have an unimpeded view of the industrial robot.
  - Eye-contact between all persons must be possible at all times.
- The operator must be so positioned that he can see into the danger area and get out of harm's way.
- Unexpected motions of the manipulator cannot be ruled out, e.g. in the event of a fault. For this reason, an appropriate clearance must be maintained between persons and the manipulator (including tool). Guide value: 50 cm.

  The minimum clearance may vary depending on local circumstances, the motion program and other factors. The minimum clearance that is to apply for the specific application must be decided by the user on the basis of a risk assessment.

Setup work in T2

If it is necessary to carry out setup work from inside the safeguarded area, the following must be taken into consideration in the operating mode **Manual High Velocity (T2)**:

- This mode may only be used if the application requires a test at a velocity higher than that possible in T1 mode.
- Teaching and programming are not permissible in this operating mode.
- Before commencing the test, the operator must ensure that the enabling devices are operational.

- The operator must be positioned outside the danger zone.
- There must be no other persons inside the safeguarded area. It is the responsibility of the operator to ensure this.

3.10.6 Simulation

Simulation programs do not correspond exactly to reality. Robot programs created in simulation programs must be tested in the system in **Manual Reduced Velocity mode (T1)**. It may be necessary to modify the program.

3.10.7 Automatic mode

Automatic mode is only permissible in compliance with the following safety measures:

- All safety equipment and safeguards are present and operational.
- There are no persons in the system.
- The defined working procedures are adhered to.

If the manipulator or an external axis (optional) comes to a standstill for no apparent reason, the danger zone must not be entered until an EMERGENCY STOP has been triggered.

3.10.8 Maintenance and repair

After maintenance and repair work, checks must be carried out to ensure the required safety level. The valid national or regional work safety regulations must be observed for this check. The correct functioning of all safety functions must also be tested.

The purpose of maintenance and repair work is to ensure that the system is kept operational or, in the event of a fault, to return the system to an operational state. Repair work includes troubleshooting in addition to the actual repair itself.

The following safety measures must be carried out when working on the industrial robot:

- Carry out work outside the danger zone. If work inside the danger zone is necessary, the user must define additional safety measures to ensure the safe protection of personnel.
- Switch off the industrial robot and secure it (e.g. with a padlock) to prevent it from being switched on again. If it is necessary to carry out work with the robot controller switched on, the user must define additional safety measures to ensure the safe protection of personnel.
- If it is necessary to carry out work with the robot controller switched on, this may only be done in operating mode T1.
- Label the system with a sign indicating that work is in progress. This sign must remain in place, even during temporary interruptions to the work.
- The EMERGENCY STOP devices must remain active. If safety functions or safeguards are deactivated during maintenance or repair work, they must be reactivated immediately after the work is completed.

DANGER

Danger to life and limb due to live parts
The robot system must be disconnected from the mains power supply prior to work on live parts. It is not sufficient to trigger an EMERGENCY STOP or safety stop, because parts remain live. Death or severe injuries may result.

- Before commencing work on live parts, turn off the main switch and secure it against being switched on again.

  If the controller variant in question does not have a main switch (e.g. KR C5 micro), turn off the device switch then disconnect the power cable and secure it so it cannot be reconnected.
- Then check to ensure that the system is deenergized.
- Inform the individuals involved that the robot controller is switched off. (e.g. by affixing a warning sign)

Faulty components must be replaced using new components with the same article numbers or equivalent components approved by KUKA Deutschland GmbH for this purpose.

Cleaning and preventive maintenance work is to be carried out in accordance with the operating instructions.

Robot controller

Even when the robot controller is switched off, parts connected to peripheral devices may still carry voltage. The external power sources must therefore be switched off if work is to be carried out on the robot controller.

The ESD regulations must be adhered to when working on components in the robot controller.

Voltages in excess of 50 V (up to 780 V) can be present in various components for several minutes after the robot controller has been switched off! To prevent life-threatening injuries, no work may be carried out on the industrial robot in this time.

On robot controllers with transformers, the transformers must be disconnected before working on components in the robot controller.

Water and dust must be prevented from entering the robot controller.

Counterbalancing system

Some robot variants are equipped with a hydropneumatic, spring or gas cylinder counterbalancing system.

- **Counterbalancing system classified below category I**: is subject to the Pressure Equipment Directive but exempt from application of the Pressure Equipment Directive according to Art. 4, para. 3 and therefore not CE marked.
- **Counterbalancing system classified as category I or higher**: is subject to the Pressure Equipment Directive and CE marked as a component (see rating plate of the counterbalancing system). The pressure equipment is placed on the market in conjunction with partly completed machinery. Conformity is expressed on the declaration of incorporation according to the Machinery Directive.

The user must comply with the applicable national laws, regulations and standards pertaining to pressure equipment.

- In Germany, the counterbalancing system is work equipment according to the German Ordinance on Industrial Safety and Health (BetrSichV). Inspection intervals in Germany in accordance with the Ordinance on

Industrial Safety and Health, Sections 14 and 15. Inspection by the user before commissioning at the installation site.

- Inspection intervals in all other countries must be researched and observed. As a rule, however, at least the maintenance intervals specified by KUKA must be observed. Shorter intervals are not permitted.

The following safety measures must be carried out when working on the counterbalancing system:

- The assemblies supported by the counterbalancing systems must be secured.
- Work on the counterbalancing systems must only be carried out by qualified personnel.

Hazardous substances

The following safety measures must be carried out when handling hazardous substances:

- Avoid prolonged and repeated intensive contact with the skin.
- Avoid breathing in oil spray or vapors.
- Clean skin and apply skin cream.

Use current safety data sheets
Knowledge of the safety data sheets of the substances and mixtures used is a prerequisite for the safe use of KUKA products. Death, injuries or damage to property may otherwise result.

- Request up-to-date safety data sheets from the manufacturers of hazardous substances regularly.

3.10.9 Decommissioning, storage and disposal

The industrial robot must be decommissioned, stored and disposed of in accordance with the applicable national laws, regulations and standards.

3.10.10 Safety measures for single point of control

Overview

If certain components are used on the industrial robot, safety measures must be taken to ensure complete implementation of the principle of “single point of control” (SPOC).

The relevant components are:

- Submit interpreter
- PLC
- OPC server
- Remote control tools
- Tools for configuration of bus systems with online functionality
- KUKA.RobotSensorInterface
- KUKA.DeviceConnector
  (not KUKA.DeviceConnector pre-installed)

Since only the system integrator knows the safe states of actuators in the periphery of the robot controller, it is his task to set these actuators to a safe state, e.g. in the event of an EMERGENCY STOP.

Further safety measures for Single Point of Control
Depending on the specific application, further safety measures may be required to ensure complete implementation of the principle of “single point of control”. Failure to take this precaution into consideration may result in death, injuries or damage to property.

- Check whether further safety measures are required; if so, implement them.

T1, T2

In modes T1 and T2, the components referred to above may only access the industrial robot if the following signals have the following states:

Signal	State required for SPOC
$USER_SAF	TRUE
$SPOC_MOTION_ENABLE	TRUE

Submit interpreter, PLC

If motions, (e.g. drives or grippers) are controlled with the submit interpreter or the PLC via the I/O system, and if they are not safeguarded by other means, then this control will take effect even in T1 and T2 modes or while an EMERGENCY STOP is active.

If variables that affect the robot motion (e.g. override) are modified with the submit interpreter or the PLC, this takes effect even in T1 and T2 modes or while an EMERGENCY STOP is active.

- In T1 and T2, the system variable $OV_PRO must not be written to by the submit interpreter or the PLC.

OPC server, KUKA.DeviceConnector, remote control tools

These components can be used with write access to modify programs, outputs or other parameters of the robot controller, without this being noticed by any persons located inside the system.

Safety measure:

If these components are used, outputs that could cause a hazard must be determined in a risk assessment. These outputs must be designed in such a way that they cannot be set without being enabled. This can be done using an external enabling device, for example.

Tools for configuration of bus systems

If these components have an online functionality, they can be used with write access to modify programs, outputs or other parameters of the robot controller, without this being noticed by any persons located inside the system.

- WorkVisual from KUKA
- Tools from other manufacturers

Safety measure:

In the test modes, programs, outputs or other parameters of the robot controller must not be modified using these components.

4 Technical data

4.1 Basic data

	KR C5 micro
Maximum number of servo axes	6
Weight	approx. 9.8 kg
Protection rating (IEC 60529)	IP20
Sound level	< 60 dB (A)
Default color	Housing: iron gray (RAL 7011); Housing base: light gray (RAL 7035)
Load on cabinet roof	250 N with even distribution
Clearance for side-by-side installation	-

Condensation must not occur during operation.

Rated supply voltage	AC 1x 200 V - 240 V
Rated supply voltage tolerance	± 10 %
Rated connected load	1.30 kVA
System impedance	≤ 300 mΩ
Ground leakage current	≤ 10 mA
Mains-side fusing	1x 16 A slow-blowing, type C
Mains frequency	50...60 Hz
Thermal output	max. 250 W

Alternative power supply connection: two-phase with grounded neutral (as symmetrical as possible) between the phases used (>>> *5.8 "Power supply connection" Page 67*)

Humidity class (EN 60204)	-
Classification of environmental conditions (EN 60721-3-3)	3K4
Temperature change	1.1 K/min
Ambient temperature	
During operation	0 °C to 45 °C (273 K to 318 K)
During storage/transportation	-25 °C to 70 °C (248 K to 343 K)
During operation with cooling unit	-
During storage/transportation without battery	-
Altitude	
Without derating	max. 2000 m above mean sea level
With derating	max. 3000 m above mean sea level (derating 5%/1000 m)

Overvoltage category II	From 2000 m to 3000 m above mean sea level
Overvoltage category III	up to 2000 m above mean sea level
Degree of fouling	2

Vibration resistance

r.m.s. acceleration (sustained oscillation)	
During operation	3 g
During transportation	3 g
Frequency range (sustained oscillation)	
During operation	10...2000 Hz
During transportation	10...2000 Hz
Acceleration (shock in X/Y/Z direction)	
During operation	10 g
During transportation	10 g
Waveform/duration (shock in X/Y/Z direction)	
During operation	Half-sine/11 ms
During transportation	Half-sine/11 ms

If more severe mechanical stress is expected, the controller must be installed on anti-vibration components.

Safe outputs

Each safe output of type “Relay” is rated for a maximum number of switching cycles during its service life.

Switching cycles	Service life: 20 years < 1,900,000 (corresponds to 260 switching cycles per day)

The module must be exchanged when the number of switching cycles is exceeded.

Safe inputs

Switching level of the inputs	The state for the inputs is not defined for the voltage range from 5 V to 11 V (transition range). Either the ON state or the OFF state is set. • Signal Off / 0: OFF state for the voltage range from -3 V to 5 V (OFF range). • Signal On / 1: ON state for the voltage range from 11 V to 30 V (ON range).
Capacitive load for the inputs per channel and connected switching device	< 200 nF

Resistive load for the inputs per channel and connected switching device	< 33 Ω

4.2 Dimensions

The dimensions of the robot controller are indicated in the following diagram.

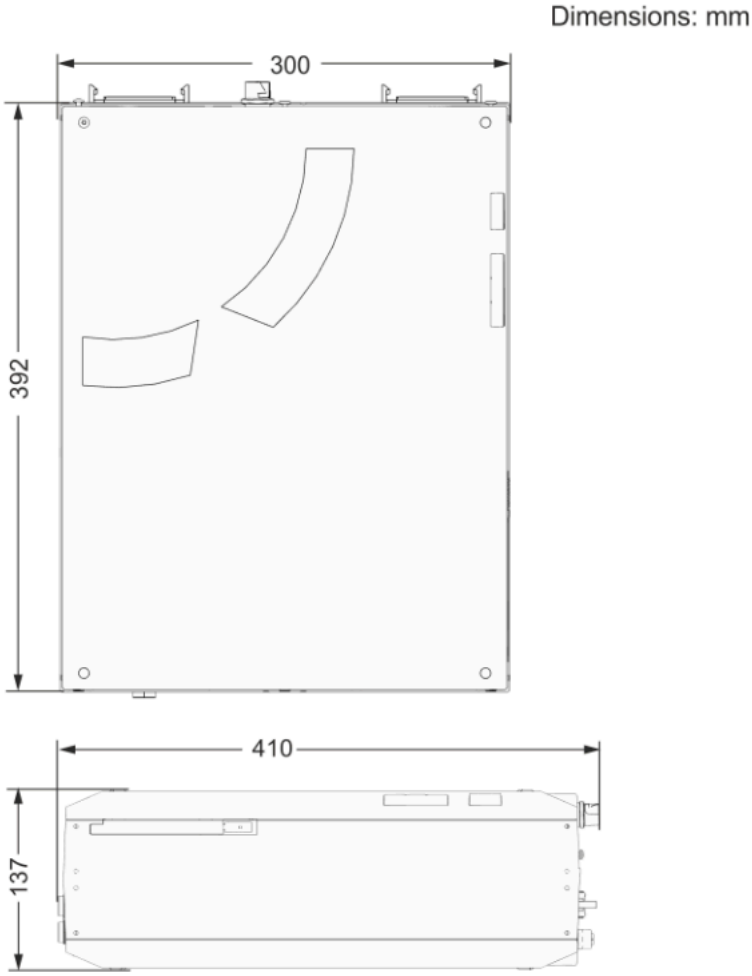

Fig. 4-1: Dimensions

4.3 Minimum clearances, robot controller

The minimum clearances that must be maintained for the robot controller are indicated in the diagram (>>> *Fig. 4-2*).

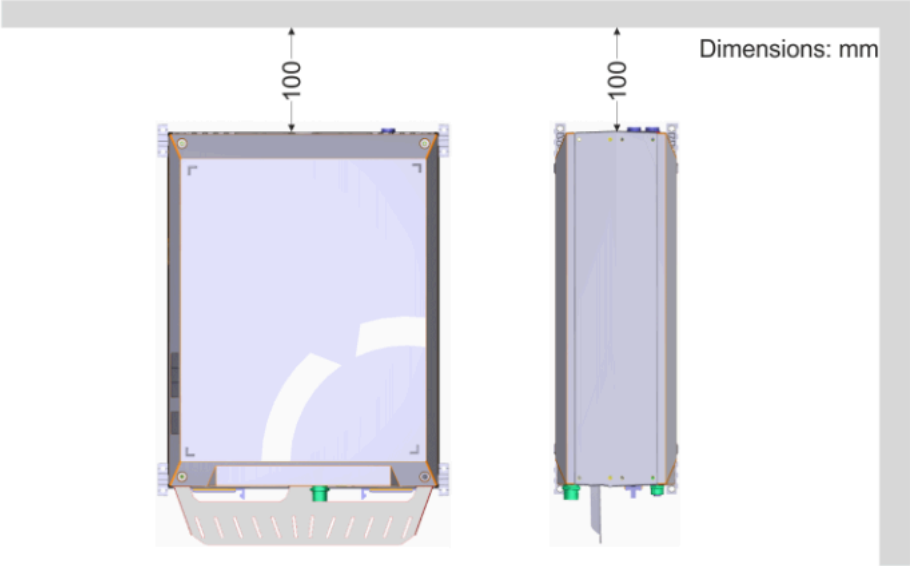

Fig. 4-2: Minimum clearances

NOTICE

Damage to property due to failure to maintain minimum clearances
If the minimum clearances are not maintained, this can result in damage to the robot controller.

- Always maintain the specified minimum clearances.

NOTICE

Damage to property due to build-up of discharged heat
If the heat discharged by the robot controller is not dissipated, this may lead to unintentional shutdowns or a shortened service life of the robot controller.

- Position the robot controller in such a way that the discharged heat cannot accumulate.

Certain maintenance and repair tasks on the robot controller (>>> *9 "Maintenance" Page 107*) (>>> *10 "Repair" Page 111*) must be carried out from the side or from the rear. The robot controller must be accessible for this. If the side or rear panels are not accessible, it must be possible to move the robot controller into a position in which the work can be carried out.

4.4 Minimum clearances for installation in an external housing

When installing the robot controller in a closed external housing, it must be ensured that the thermal output of the robot controller is dissipated.

Requirements for installation of the KR C5 micro in an external housing:

- Distance between front of robot controller (air inlet) and housing: min. 150 mm
- Distance between rear of robot controller (air outlet) and housing: min. 100 mm

4.5 Plates and labels

Overview

The following plates and labels are attached to the robot controller. They must not be removed or rendered illegible. Illegible plates and labels must be replaced.

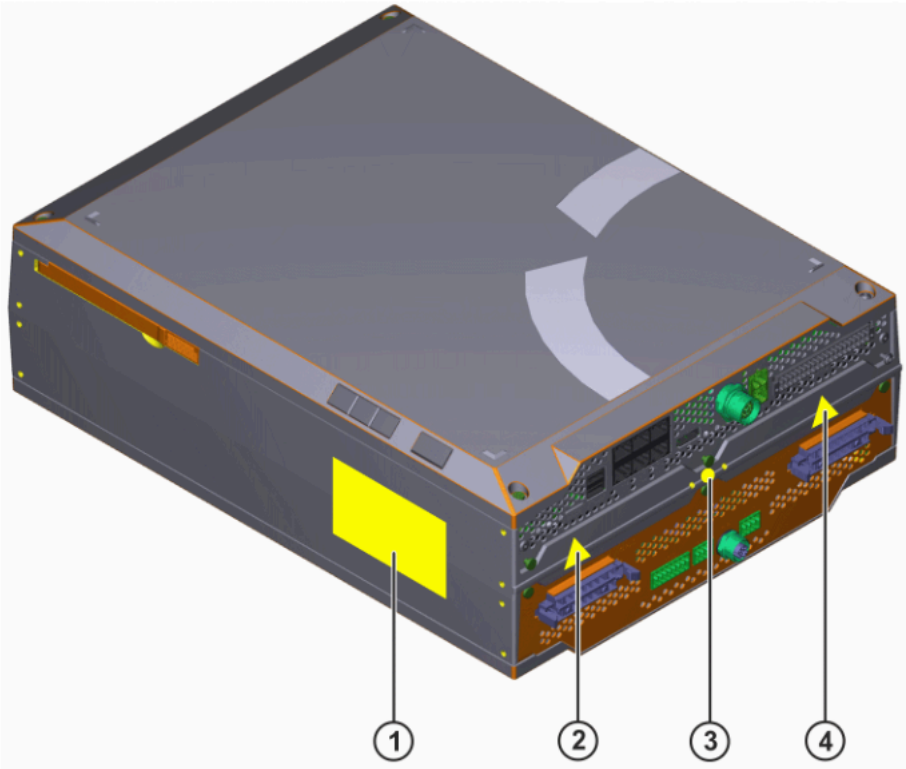

Fig. 4-3: Plates and labels on front

Item	Description
1	KUKA Deutschland GmbH Zugspitzstraße 140 86165 Augsburg, Germany Country of Origin Germany Typ / Type / Type / XXXXXXXXXXXXXX Artikel-Nr. / Article-No. / No. d'article / 00123456 Serien-Nr. / Serial No. / No. de Série / 9999999 Baujahr / Date / Année de fabric. / XX/20XX Gewicht / Weight / Poids / XXXXKg Anschlußspg. / Supply Volt. / Tension / XXXV Netzfrequenz / Frequency / Fréquence / XXHz Vollastbstrom / charge full-load current / Courant pleine / XXXA Netzsicherung / Mains fuse / Fusible de secteur / XXXA AN:123456 SN:9999999 **KSP identification plate**
2, 4	 **General warning** Warning of potential hazard

Item	Description
3	**Protective equipotential bonding connection**

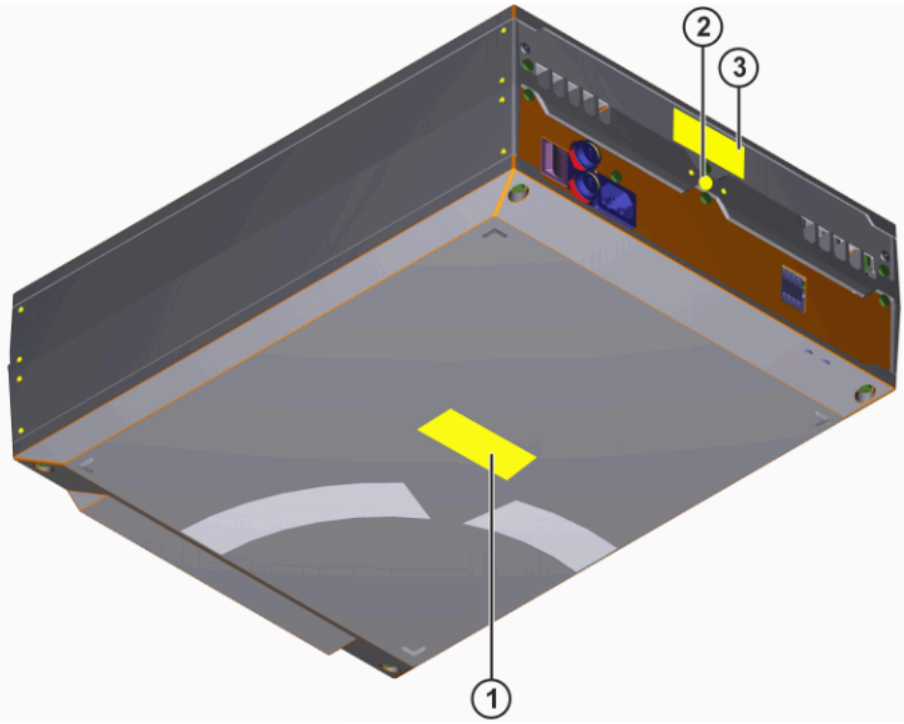

Fig. 4-4: Plates and labels on rear

Item	Description
3	**Robot controller rating plate** Contains the article number and serial number of the robot controller
1	**Electric shock hazard** The labeled cover of the power unit must not be opened.

Item	Description
2	**Protective equipotential bonding connection**

The plates may vary slightly from the examples illustrated above depending on the specific cabinet type or as a result of updates.

4.6 REACH duty to communicate information acc. to Art. 33

As of June 2007, the Regulation (EC) 1907/2006 of the European Parliament and of the Council dated 18 December 2006 on the registration, evaluation and authorization of chemicals (REACH Regulation) is in force.

Detailed REACH information can be found in the product information in KUKA Xpert.

5 Planning

5.1 Overview of planning

This is an overview of the most important planning specifications. The precise planning depends on the application, the manipulator type, the technology packages used and other customer-specific circumstances. For this reason, the overview does not claim to be comprehensive.

Robot controller

Step	Description	Information
1	Electromagnetic compatibility (EMC)	(>>> *5.2 "Electromagnetic compatibility (EMC)" Page 57*)
2	Installation conditions for robot controller	(>>> *5.3 "Installation conditions" Page 58*)
3	Connection conditions	(>>> *5.6 "Connection conditions" Page 65*)
4	PE equipotential bonding	(>>> *5.5 "PE equipotential bonding" Page 64*)
5	Power supply connection	(>>> *5.8 "Power supply connection" Page 67*)
6	Safety interfaces XG11.1 and XG58	(>>> *5.9.8.2 "Safety interface XG11.1" Page 81*) (>>> *5.9.8.1 "Interface XG58, external enabling switch" Page 79*)
7	Ethernet interface	(>>> *5.9.3.1 "KSI interface" Page 72*)
		(>>> *5.9.3.4 "KLI interfaces" Page 73*) (>>> *5.9.3.5 "KLI IT interface" Page 73*)
8	EtherCAT interface	(>>> *5.9.3.6 "KEI interface" Page 73*)
9	Optional interfaces	(>>> *5.9.3.3 "Daisy chain interface" Page 73*)
10	Performance level	(>>> *5.10 "Performance level" Page 93*)

5.2 Electromagnetic compatibility (EMC)

Description

If connecting cables (e.g. field buses, etc.) are routed to the system board from outside, only shielded cables with an adequate degree of shielding may be used.

The robot controller corresponds to EMC class A, Group 1, in accordance with EN 55011 and is intended for use in an **industrial setting**. In the case of use in other environments, additional measures must be taken to ensure electromagnetic compatibility.

5.3 Installation conditions

The dimensions and installation conditions of the robot controller are specified in the chapter “Technical data”.

(>>> *4.1 "Basic data" Page 49*)

(>>> *4.2 "Dimensions" Page 51*)

(>>> *4.3 "Minimum clearances, robot controller" Page 51*)

NOTICE

In addition to observing the installation conditions, it must be ensured that all plug connections on the robot controller are easily accessible.

The robot controller can be installed as a standalone device, stacked, or on the wall, or mounted on a mounting plate as a panel-mount variant for further installation. The robot controller can optionally be installed in a 19" rack. The specifications in the chapter “Technical data” (>>> *4.1 "Basic data" Page 49*) must be observed.

The robot controller is designed for use in the horizontal position. The robot controller can optionally be operated in the vertical position.

CAUTION

Risk of injury and damage to property due to conductive dirt or condensation

If the robot controller is operated in an environment with conductive dirt or condensation, this can lead to uncontrolled electrical connections inside the robot controller. Injuries or damage to property may result.

- The robot controller may only be operated in environments without conductive dirt.
- Avoid humidity and condensation.

CAUTION

Risk of injury and damage to property due to operation in non-approved environment

If the robot controller is operated in an environment with a higher degree of fouling and possibly with formation of condensation, this can lead to uncontrolled electrical connections inside the robot controller. These ambient conditions correspond to degree of fouling 3 or 4. Non-compliance can result in injury or damage to property.

- In the case of environments with heavy fouling, the robot controller must be integrated into an appropriate protective enclosure.
- It must be ensured that the installation site is protected from conductive fouling or condensation, e.g. through an appropriate housing or cabinet with a protective rating of at least IP 54. The required protective rating for the housing or cabinet must always be determined on the basis of the given ambient conditions and may be higher than IP 54.

Installing the robot controller

The robot controller can be installed with or without holders on an even surface or integrated into a cabinet.

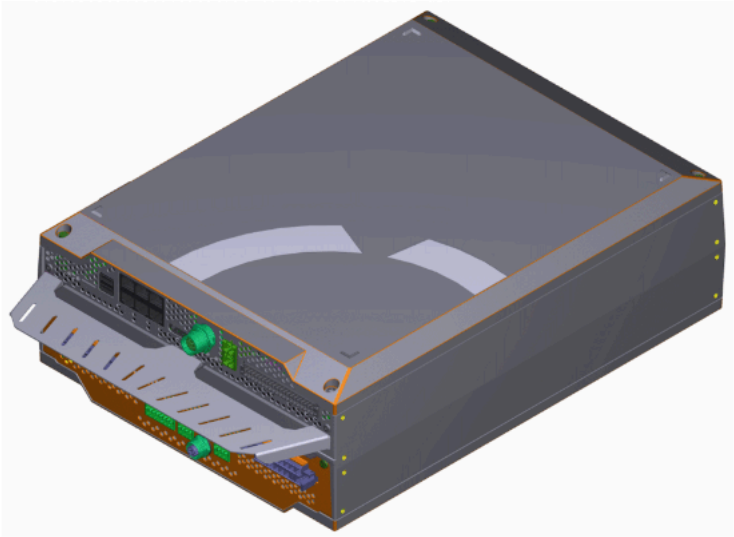

Fig. 5-1: Operation without holders

The front and rear sides of the robot controller must always be accessible to the cooling air.

Mounting brackets 19" frame

If the robot controller is to be installed in a 19" rack, a Mounting brackets 19" frame must be used. The depth of the 19" insert must be at least 700 mm.

Fig. 5-2: Mounting brackets 19" frame

The Mounting brackets 19" frame must be installed in a 19" rack before inserting the robot controller. (>>> *10.2 "Exchanging the Mounting brackets 19" frame" Page 112*)

Robot controller stacked

One robot controller can be stacked on top of another one. The holders of the robot controller must be used for this purpose. The lower robot controller should be fastened to the floor.

To fasten the upper controller, the 4 holders must be mounted diagonally on the upper and lower controller as illustrated in (>>> *Fig. 5-3*).

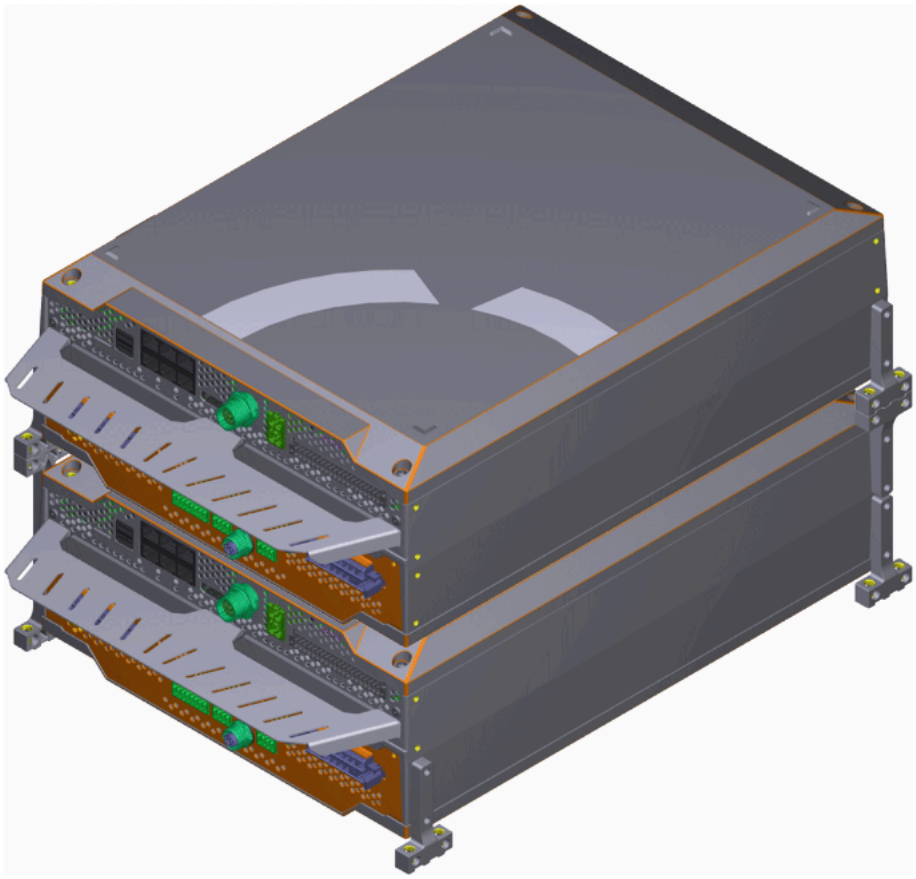

Fig. 5-3: Stacked robot controller (flat)

NOTICE
A maximum of 3 robot controllers can be stacked one on top of the other.

Standing on side

The robot controller can be installed standing on its side on an even surface or integrated into a cabinet. The holders of the robot controller must be used for this purpose.

Fig. 5-4: Robot controller standing on side

Installation on wall

If the robot controller is installed on the wall or mounted on a mounting plate as a panel-mount variant, it must be taken into consideration that the air inlet for cooling is on the underside.

Two installation positions are possible:

- Flat installation on wall (>>> *Fig. 5-5*)
- Vertical installation on wall (>>> *Fig. 5-6*)

The holders of the robot controller must be used for installation on the wall or on a mounting plate as a panel-mount variant.

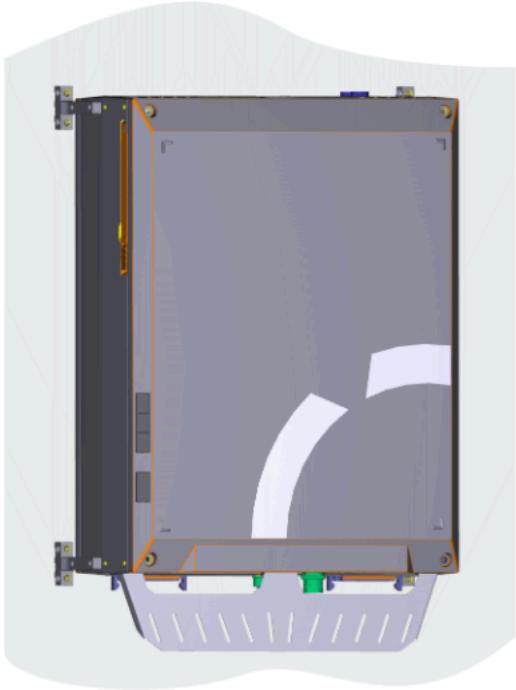

Fig. 5-5: Flat installation on wall

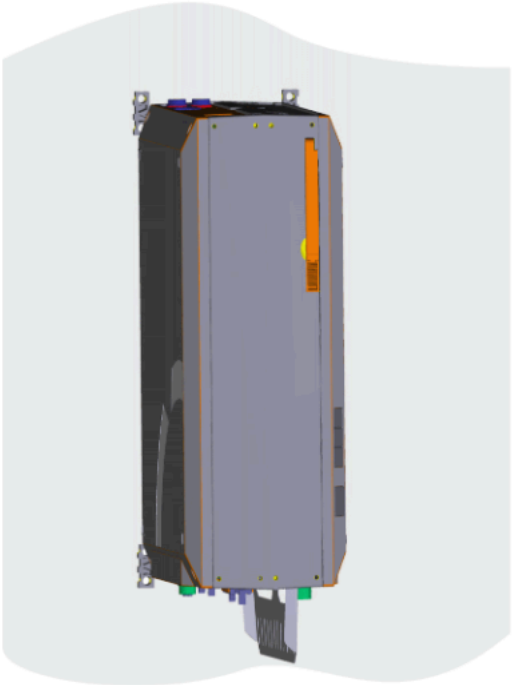

Fig. 5-6: Vertical installation on wall

5.4 Installation with holders

If the robot controller is fastened with the holders to an even surface, wall or mounting plate, the dimensions of the drilling templates must be observed.

Screws required:

- Horizontal installation: M5
- Vertical installation: M6

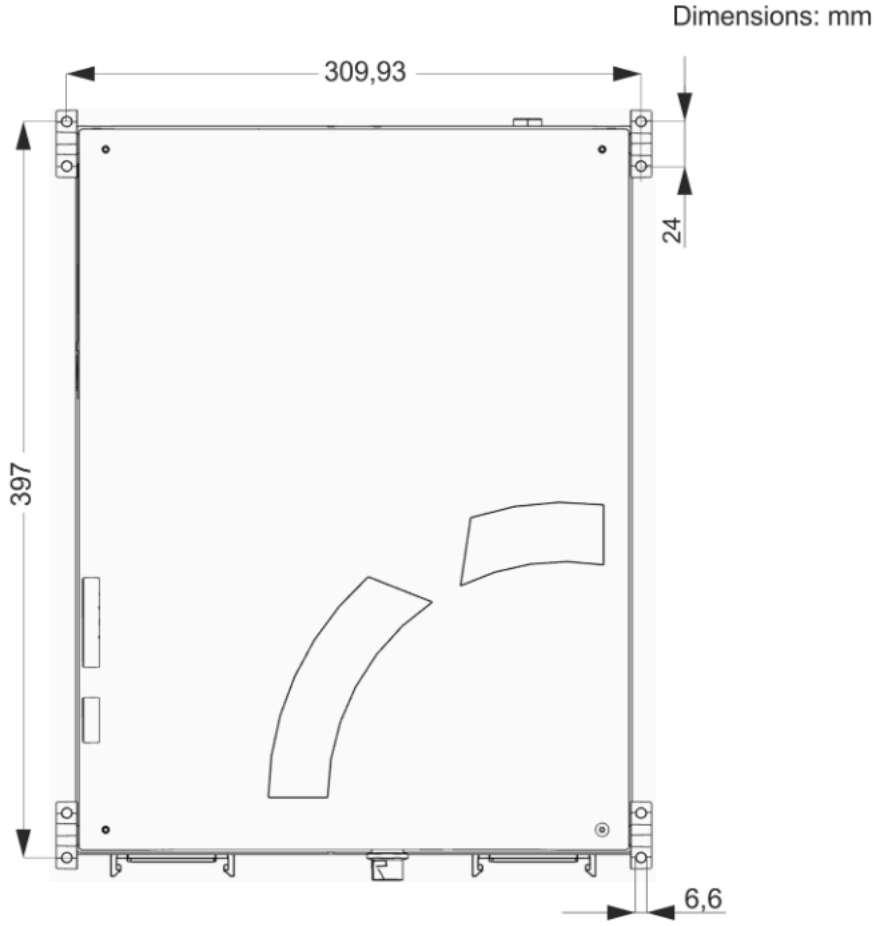

Fig. 5-7: Installation with holders (1)

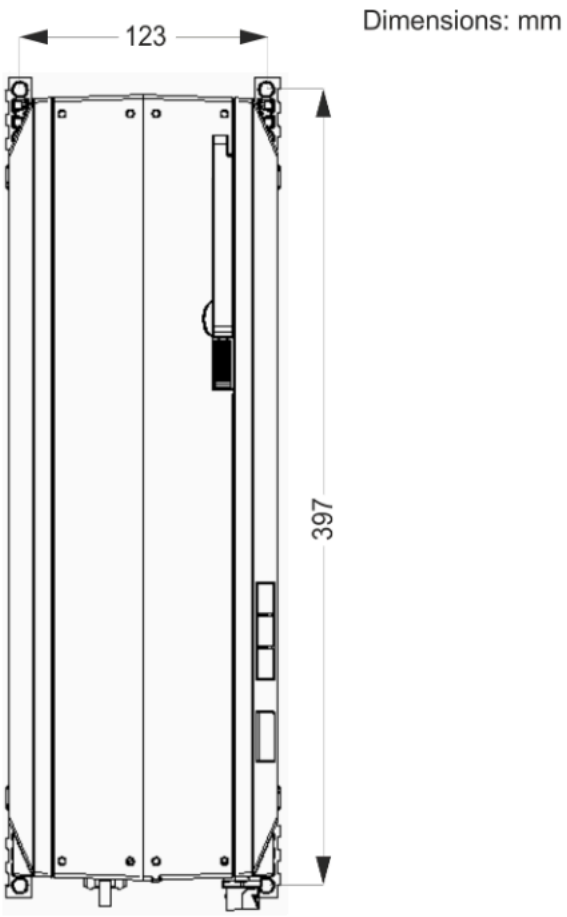

Fig. 5-8: Installation with holders (2)

5.5 PE equipotential bonding

Description

The following cables must be connected before start-up:

- A 4 mm^2 cable as protective equipotential bonding between the manipulator and the robot controller.
- An additional PE conductor between the central PE rail of the supply cabinet and the PE connection of the robot controller. A cross-section of 4 mm^2 is recommended.

The following connection options are available on the front or rear side of the robot controller for the two PE connections:

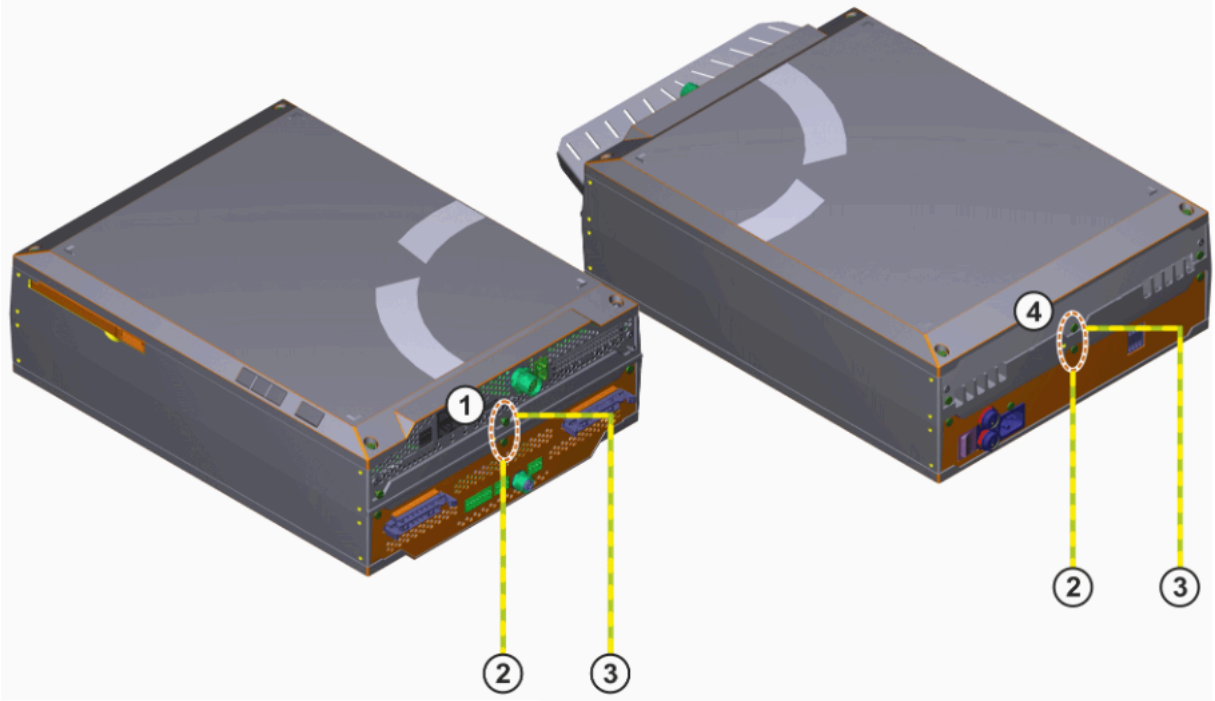

Fig. 5-9: Equipotential bonding between the manipulator and the robot controller

1 Equipotential bonding connection on the front of the robot controller
2 Protective equipotential bonding between the manipulator and the robot controller
3 PE cable to the central PE rail of the supply cabinet
4 Equipotential bonding connections on the rear of the robot controller

5.6 Connection conditions

The robot controller may only be connected to grounded-neutral power supply systems.

Rated supply voltage	AC 1x 200 V - 240 V
Rated supply voltage tolerance	± 10 %
Rated connected load	1.30 kVA
System impedance	≤ 300 mΩ
Ground leakage current	≤ 10 mA
Mains-side fusing	1x 16 A slow-blowing, type C
Mains frequency	50...60 Hz
Thermal output	max. 250 W

CAUTION

If the robot controller is connected to a power system **without** a grounded neutral, this may cause malfunctions in the robot controller and material damage to the power supply units. Electrical voltage can cause injuries. The robot controller may only be operated with grounded-neutral power supply systems.

If use of a residual-current circuit-breaker (RCCB) is planned, we recommend the following RCCB: trip current difference 30 mA type B, universal-current sensitive, selective.

5.7 Routing the connecting cables

Overview

- A connecting cable set is supplied with the industrial robot. In the standard version this consists of:
  - Motor cables to the manipulator
  - Data cables to the manipulator
- The following cables may be provided for additional applications:
  - Peripheral cables

Bending radius

The following bending radii must be observed:

- Fixed installation: 3 ... 5 x cable diameter.
- Installation in cable carrier: 7 ... 10 x cable diameter (cable must be specified for this).

WARNING

Danger to life and limb due to incorrectly assigned cables
The robot controller is preconfigured for the specific industrial robot. The manipulator and other components can receive incorrect data if they are connected to a different robot controller. Death, severe injuries or damage to property may result.

- Only connect the manipulator to the corresponding robot controller.

NOTICE

Route the connecting cables between the robot and the robot controller in such a way as to exclude the possibility of damage to the cables.

NOTICE

Route the motor cables to the manipulator junction box separately from the data cables.

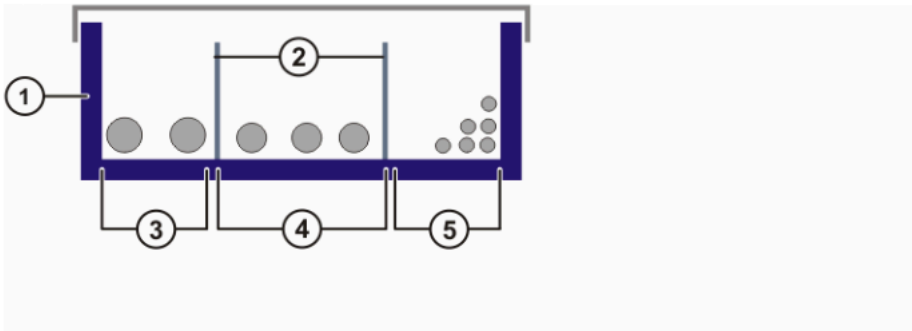

Fig. 5-10: Example: Installing the cables in the cable duct

1 Cable duct
2 Separating web
3 Welding cables
4 Motor cables
5 Data cables

CAUTION

Risk of injury and damage to property due to incorrect mastering after exchange of the data cable
Following a defect with subsequent exchange of the data cable, the mastering may be incorrect. Injuries or damage to property may result.

- Following an exchange of the data cable, carry out mastering or perform a mastering test of all axes.

5.8 Power supply connection

Description

For connection to the mains, the robot controller is equipped with a 3-pole high-temperature appliance inlet of type C15. The robot controller must be connected to the mains via the device connection cable included in the scope of supply or the mains connector included in the scope of supply.

Connector pin allocation XD1

Pin	Description
1	L1
2	N
PE	PE

Infeed

- Single-phase:
  - AC 200-240 V ± 10%, single-phase TN system
  - AC 200-240 V ± 10%, single-phase 3-wire system (single/split phase)
  - 50 Hz ± 1 Hz or 60 Hz ± 1 Hz
- Two-phase:
  - 208 Y / 120 V ±10% solidly grounded wye, 3-phase, 4-wire
  - 240 Y / 131 V ±10% solidly grounded wye, 3-phase, 4-wire
  - 50 Hz ± 1 Hz or 60 Hz ± 1 Hz

In the systems specified above with grounded neutral, the controller must be connected to 2 phases so that there is a supply voltage present in the range 200 … 240 V ±10%.

Device-side fusing

- 2x 10 A slow-blowing, type C

5.9 Overview of interfaces

The robot controller has the following interfaces that are connected to the specified boards:

Board	Interfaces
FCU-300	• XD1 • XD2 • XD20.1 • XD20.2
SCU-6-1S	• XG11.1 • XF21 • XG33 • XG58
“Basic” system board	• XGSD • XFUSB 1, XFUSB 2 • XF1 - XF6 • XGDP • XG19
“Performance” system board	• XGSD • XFUSB 1, XFUSB 2 • XF1 - XF8 • XGDP • XG19
“Standard” interface board	• XD12, XD12.1 • XG12

The following interfaces are available on the front and rear of the robot controller:

Front view with “Basic” system board

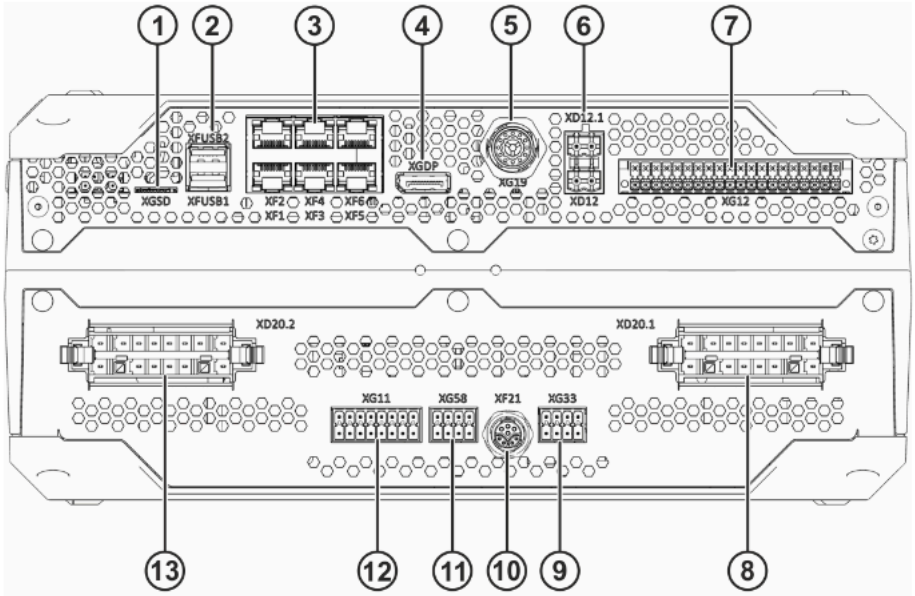

Fig. 5-11: Connection panel, front view

1 XGSD interface for SD card

2 USB 3.0 interfaces XFUSB1 and XFUSB2

3 Ethernet and EtherCAT interfaces for “Basic” system board:

- XF1 KSI interface (KUKA Service Interface)
- XF2 KEI interface (KUKA EtherCAT Interface)
- XF3 KUKA internal daisy chain “Next Robot”
- XF4 KUKA internal daisy chain “Pre Robot”
- XF5 KLI 2 interface (KUKA Line Interface)
- XF6 KLI 1 interface (KUKA Line Interface)

4 XGDP interface

Display port DP 1.2

5 XG19 interface for smartPAD connection

6 24 V supply for external customer interface XG12

- XD12 interface 24 V PWR IN
- XD12.1 interface 24 V PWR OUT

7 XG12 interface for connection of 16 digital inputs/outputs (I/O)

8 XD20.1 motor interface 1 for connection of axes A1-A3

9 XG33 (3 Fast Measurement inputs and 1 UL lamp output)

10 XF21 interface RDC

11 XG58 safety interface (2 safe inputs for external enabling device and additional EMERGENCY STOP)

12 XG11.1 safety interface (2 safe inputs, 1 safe output)

13 XD20.2 motor interface 2 for connection of axes A4-A6

Front view with “Performance” system board

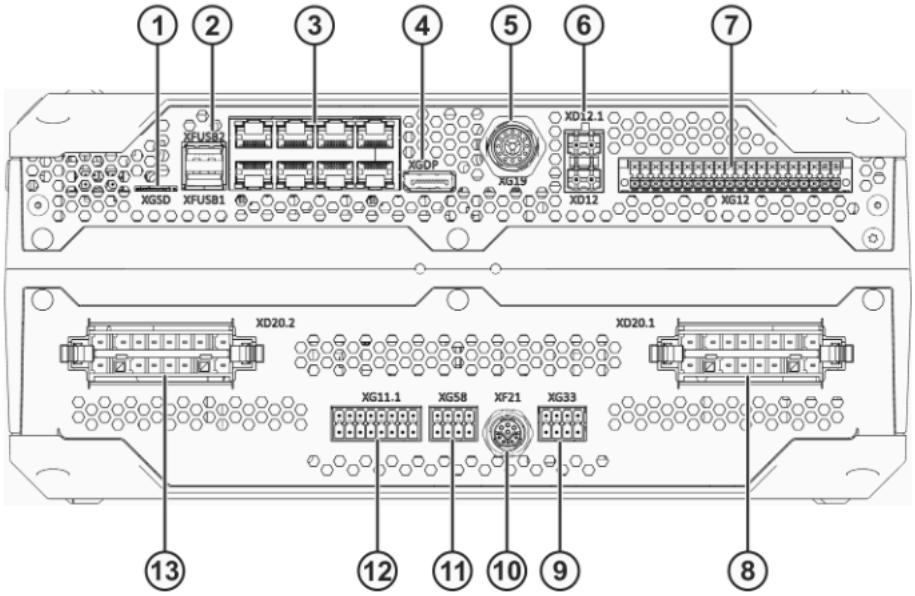

Fig. 5-12: Connection panel, front view

1 XGSD interface for SD card

2 USB 3.0 interfaces XFUSB1 and XFUSB2

3 Ethernet and EtherCAT interfaces for “Performance” system board:

- XF1 KSI interface (KUKA Service Interface)
- XF2 KLI IT interface (KUKA Line Interface IT)
- XF3 KUKA internal daisy chain “Next Robot”
- XF4 KUKA internal daisy chain “Pre Robot”
- XF5 KLI 2 interface (KUKA Line Interface)
- XF6 KLI 1 interface (KUKA Line Interface)
- XF7 KONI interface
- XF8 KEI interface (KUKA EtherCAT Interface)

4 XGDP interface

Display port DP 1.2

5 XG19 interface for smartPAD connection

6 24 V supply for external customer interface XG12

- XD12 interface 24 V PWR IN
- XD12.1 interface 24 V PWR OUT

7 XG12 interface for connection of 16 digital inputs/outputs (I/O)

8 XD20.1 motor interface 1 for connection of axes A1-A3

9 XG33 (3 Fast Measurement inputs and 1 UL lamp output)

10 XF21 interface RDC

11 XG58 safety interface (2 safe inputs for external enabling device and additional EMERGENCY STOP)

12 XG11.1 safety interface (2 safe inputs, 1 safe output)

13 XD20.2 motor interface 2 for connection of axes A4-A6

Rear view

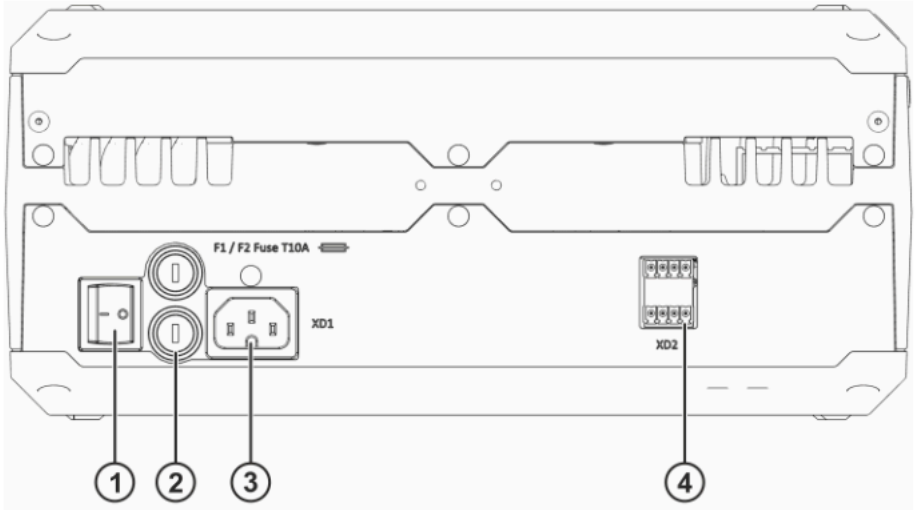

Fig. 5-13: Connection panel, rear view

1 Device switch

2 Fuses F1 and F2

3 XD1 interface, power supply connection

4 XD2 interface

- 24 V power supply of the UPS
- Daisy chain connection to other robot controllers

5.9.1 XGSD interface, SD card

Description

Project data can be saved using the XGSD interface and the SD card.

5.9.2 USB interface

Only USB sticks, keyboard, mouse and passive hubs (without their own power supply) may be connected to the XFUSB interfaces.

The maximum permissible cable length of the connected interface is 5 m.

5.9.3 Interfaces XF1 - XF8

Description

Interfaces XF1 to XF8 are Ethernet and EtherCAT interfaces to the “Basic” system board (XF1 - 6) or “Performance” system board (XF1 - 8).

	System board		
Interface	**“Basic”**	**“Performance”**	
KSI	XF1	XF1	• 10Base-T Auto-Negotiation • 100Base-TX Auto-Negotiation • 1000Base-T Auto-Negotiation
KONI	-	XF7	
KUKA internal daisy chain OUT	XF3	XF3	
KUKA internal daisy chain IN	XF4	XF4	
KLI 2	XF5	XF5	
KLI 1	XF6	XF6	
KLI IT		XF2	
KEI	XF2	XF8	• 100Base-TX Auto-Negotiation

Necessary equipment

- Connector RJ45
- Recommended connecting cable: Ethernet-compatible, min. category CAT 5e

Pin assignment

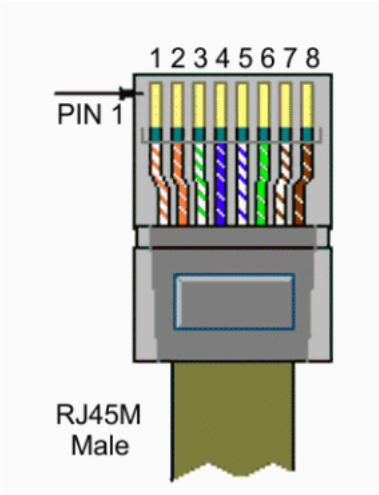

Fig. 5-14: Pin assignment

Connector pin allocation

Pin assignment for the interfaces “Basic” system board (XF1 - 6) and “Performance” system board (XF1 - 8).

Pin	Description	
1	BI_DB+	
2	BI_DB-	
3	BI_DA+	
4	BI_DD+	Not assigned for KEI interface.
5	BI_DD-	
6	BI_DA-	
7	BI_DC+	Not assigned for KEI interface.
8	BI_DC-	

5.9.3.1 KSI interface

Description

The KSI interface is intended for connecting a notebook for the purpose of diagnosis, WorkVisual configuration, update, etc., via the KSI (KUKA Service Interface).

The KSI interface must not be connected to an IT network (e.g. to DHCP servers).

The connected device must be certified in accordance with EN 60950-1.

The maximum permissible cable length of the connected interface is 100 m.

5.9.3.2 KONI interface

Description

The KONI interface can be used for internal and external communication. The KONI interface is primarily intended as an interface for KUKA technology packages. This involves implementing specific applications of the KU-

KA technology packages (e.g. connecting a camera). The interface is activated via the software (default: not active).

5.9.3.3 Daisy chain interface

Description

Multiple robot controllers can be connected in series by means of daisy chaining using a bus system via the two interfaces XF3 and XF4. The resulting network can be used, for example, for implementing RoboTeam functionalities:

- XF3 connection to the next robot controller (daisy chain interface OUT)
- XF4 connection to the previous robot controller (daisy chain interface IN)

5.9.3.4 KLI interfaces

Description

The KLI interfaces are equivalent. The interfaces can be used to connect OT networks or IT networks. The following connections are possible:

- KLI 1: Interface to the PLC (e.g. Profinet with ProfiSafe or EtherNet/IP with CIP Safety)
- KLI 2: Interface to the terminal (e.g. Profinet or Ethernet/IP)

The connected device must be certified in accordance with EN 60950-1.

The maximum permissible cable length of the connected interface is 100 m.

5.9.3.5 KLI IT interface

Description

The KLI IT interface can be used for connection to an IT network. The following options are thus available:

- Backup and update services
- Edge or cloud services, e.g. dashboards for condition monitoring
- Acquisition of messages
- Creation of logbooks
- Detection of anomalies
- Predictive maintenance

The interface is activated via the software (default: not active).

The connected device must be certified in accordance with EN 60950-1.

The maximum permissible cable length of the connected interface is 100 m.

5.9.3.6 KEI interface

Description

EtherCAT slaves outside of the robot controller are connected via the KEI interface. The EtherCAT line is routed out of the robot controller.

Bus couplers (e.g. for EtherCAT, Profibus, DeviceNet) can be operated via the KEI interface in order to connect the controller to a PLC or bus terminals via these bus couplers. If an EtherCAT coupler is used, a safe FSoE connection to a PLC can be established via the KEI interface.

The EtherCAT devices must be configured with WorkVisual.

5.9.4 XGDP interface

Description

An external monitor can be connected via the XGDP interface for service purposes. The XGDP interface provides no safe outputs. The information displayed must not be used for safety-relevant measures.

VGA support is possible via DP on VGA adapter.

The connected device must be certified in accordance with EN 60950-1.

The maximum permissible cable length of the connected interface is 5 m.

5.9.5 XG12 digital I/O interfaces

Description

The I/O interface XG12 has 16 non-safe inputs and 16 non-safe outputs:

- 16 inputs that can operate both NPN and PNP sensors
- 16 outputs that can operate both NPN and PNP actuators

The inputs and outputs can be configured in groups of 8 from high-side mode to low-side mode.

- A jumper from pin 1 to pin 2 switches inputs 1 - 8 to low-side mode.
- A jumper from pin 3 to pin 4 switches inputs 9 - 16 to low-side mode.
- A jumper from pin 5 to pin 6 switches outputs 1 - 8 to low-side mode.
- A jumper from pin 7 to pin 8 switches outputs 9 - 16 to low-side mode.

Default: high-side

Power is supplied via interface XD12.

Necessary equipment

- Connector: Phoenix 40-contact
- Cable clamping range: 0.2 - 1.5 mm^2
- Recommended cable cross-section: 0.5 mm^2

Contact diagram

Fig. 5-15: Contact diagram, view from contact side

Connector pin allocation

Pin	Description
1	IN_Config 1-8
2	Channels are configurable (depending on the position of the jumper)
3	IN_Config 9-16
4	Channels are configurable (depending on the position of the jumper)
5	OUT_Config 1-8
6	Channels are configurable (depending on the position of the jumper)
7	OUT_Config 9-16
8	Channels are configurable (depending on the position of the jumper)
9 - 39 All odd pin numbers	IN 1 ... IN 16 Digital inputs 1 - 16
10-40 All even pin numbers	OUT 1 ... OUT 16 Digital outputs 1 - 16 (output current = 0.5 A)

High-side mode

Switching level of the inputs	The state for the inputs is not defined for the voltage range from 5 V to 11 V (transition range). Either the ON state or the OFF state is set. • Signal Off / 0: OFF state for the voltage range from -3 V to 5 V (OFF range). • Signal On / 1: ON state for the voltage range from 11 V to 30 V (ON range).
Load current at the input (Signal On / 1)	3 … 11 mA

Low-side mode

Switching level of the inputs	The state for the inputs is not defined for the voltage range from 7 V to 18 V (transition range). Either the ON state or the OFF state is set. • Signal Off / 0: OFF state for the voltage range from 18 V to 30 V (OFF range). • Signal On / 1: ON state for the voltage range from 0 V to 7 V (ON range).
Load current at the input (Signal On / 1)	-2 … -8 mA

Power may only be supplied via a safely isolated PELV/SELV power supply unit according to EN 60950-1 with a rated voltage of 24 V ±10%.

The maximum permissible cable length of a connected interface is 50 m.

5.9.6 XD12 and XD12.1 power supply interfaces

Description

The 24 V supply voltage for non-safe I/Os is supplied via interfaces XD12 and XD12.1.

Necessary equipment

- Cable clamping range: 0.35 - 2.5 mm^2
- Recommended cable cross-section: 1.5 mm^2

Contact diagram

Fig. 5-16: Contact diagram, view from contact side

Connector pin allocation XD12 and XD12.1

Pin	Description
1	XD12 0 V external
2	XD12 +24 V external
3	XD12.1 0 V external
4	XD12.1 +24 V external

Power may only be supplied via a safely isolated PELV/SELV power supply unit according to EN 60950-1 with a rated voltage of 24 V ±10%.

The 24 V supply voltage must be protected with a maximum fuse of 10 A.

5.9.7 XD2 UPS interface

Description

The robot controller has an uninterruptible power supply (UPS) which enables the robot controller to be shut down safely in a controlled manner in the event of a power failure or if the power is switched off. The integrated UPS circuit requires a 24 V power supply for this. The power supply can be provided via a central 24 V connection or via an externally connected battery. Once the mains power supply is restored, the external battery is

recharged via the UPS circuit. One external battery can supply up to 3 robot controllers with 24 V in the event of a power failure.

NOTICE

Data loss due to operation of the robot controller without UPS
It must be ensured that the UPS is operational, otherwise the robot controller must not be operated. Operating the robot controller without the UPS may result in data loss.

- Connect the power supply of the UPS to a central 24 V ±10% connection or an external battery.

A daisy chain to the previous robot controller can additionally be connected to interface XD2 in order to loop through the signals.

Necessary equipment

- Weidmüller connector
- Cable clamping range: 0.14 - 1.5 mm^2
- Recommended cable cross-section: 1.5 mm^2

Fig. 5-17: Contact diagram, view from contact side

Connector pin allocation

Pin	Description
1D/1U	UPS_SYNC
2D/2U	PSU_GND
3D/3U	UPS_27V1 +27 V power infeed, system side
4D/4U	UPS_GND Power infeed, system side

Wiring examples with central 24 V connection

The following options are available for power supply via a central 24 V connection:

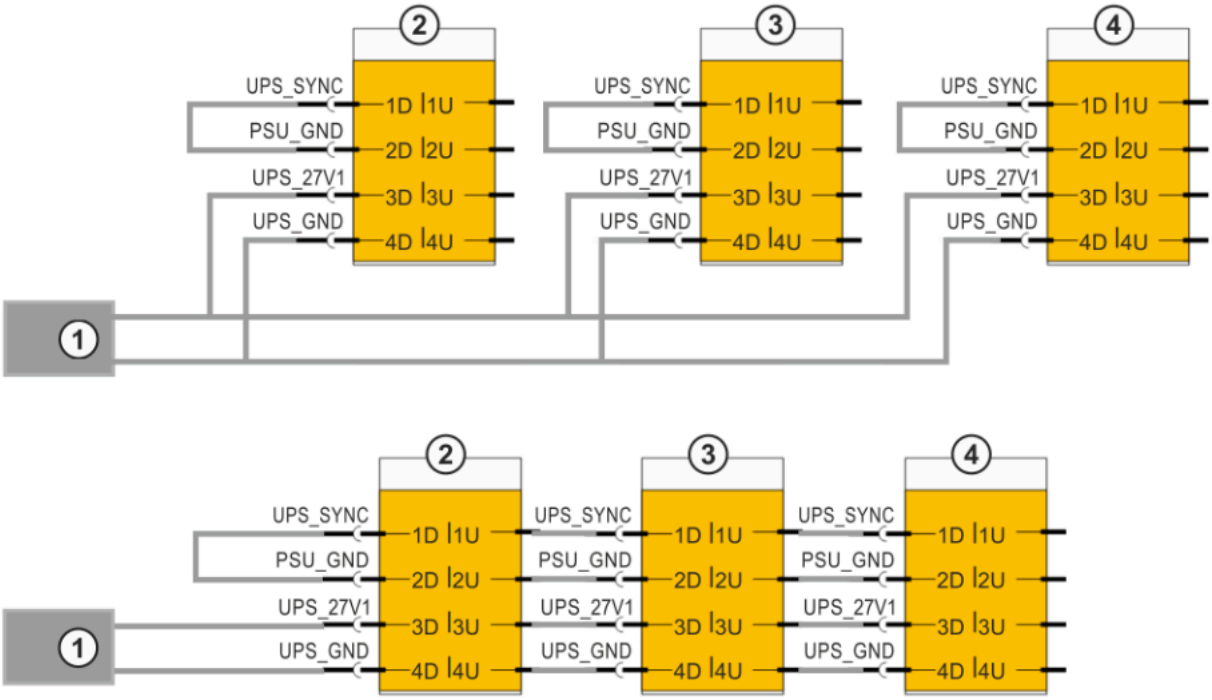

Fig. 5-18: Operation with up to 3 robot controllers

1 Central 24 V connection
2 Robot controller 1
3 Robot controller 2
4 Robot controller 3

Operation of a single robot controller with power supply via a central 24 V connection:

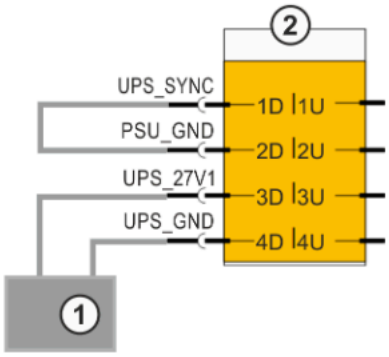

Fig. 5-19: Operation with one robot controller

1 Central 24 V connection
2 Robot controller

PSU_GND and UPS_GND are different potentials and must not be connected to one another.

Power may only be supplied via a safely isolated PELV/SELV power supply unit according to EN 60950-1 with a rated voltage of 24 V ±10%.

The maximum permissible cable length of a connected interface is 50 m.

If using UPS batterypack 24V: Detailed information is contained in the UPS batterypack 24V documentation.

5.9.8 Safety interfaces

5.9.8.1 Interface XG58, external enabling switch

Description

Interface XG58 has one safe input for connecting the external enabling switch and one safe input for connecting an additional EMERGENCY STOP.

Pressing the enabling switch enables motion enable of the drives. If the enabling button is held down in the central position, the axes can be moved to the corresponding position.

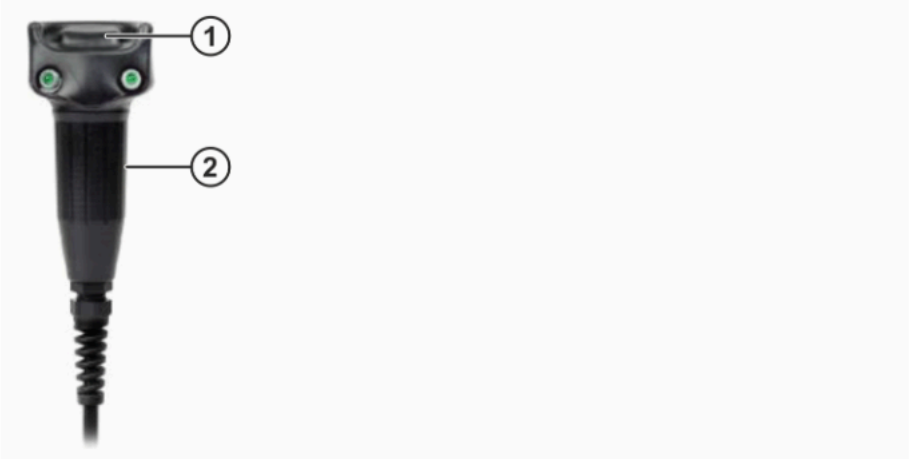

Fig. 5-20: External enabling switch

1 Enabling button
2 Enabling switch

Enabling device

The external enabling signal is transferred to the controller by actuating the enabling button. The function has 3 positions:

- Not pressed
- Center position
- Fully pressed (panic position)

The kinematic system can only be moved if the enabling switch is actuated and the enabling button is held down in the central position.

Releasing it or pressing it down fully triggers a safety stop 2.

NOTICE

The max. number of switching cycles of the external enabling switch is 20000.

WARNING

Danger to life and limb due to incorrect enabling switch
Only the external enabling switch specified by KUKA Deutschland GmbH may be connected. Non-compliance can result in death, serious injury or damage to property.

- Only connect the external enabling switch with the article number 358565.

Necessary equipment

- Connector: Phoenix 1053810
- Cable clamping range: 0.2 - 1.5 mm^2
- Recommended cable cross-section: 0.5 mm^2

Contact diagram

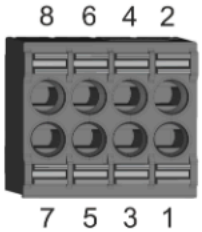

Fig. 5-21: Contact diagram

Connector pin allocation XG58

The connector bypack XG58 is delivered with the signals “External enabling” and “Local EMERGENCY STOP” jumpered.

Pin	Signal	Description	Function
5	TA_A	External enabling (channel A)	For connection of an external dual-channel enabling switch with floating contacts (Only effective in TEST modes.) If no external enabling switch is connected, pins 5/1 and 3/7 must be jumpered.
1	IN_A2		
3	TA_B	External enabling (channel B)	
7	IN_B2		
6	TA_A	Local EMERGENCY STOP (channel A)	For connection of an additional 2-channel external EMERGENCY STOP device with floating contacts. If no additional external EMERGENCY STOP device is connected, pins 6/2 and 4/8 must be jumpered.
2	IN_A3		
4	TA_B	Local EMERGENCY STOP (channel B)	
8	IN_B3		

Function of external axis enabling switch

- External enabling switch
  Enabling switch must be pressed for jogging in T1 or T2. Input is closed.

- If a smartPAD is connected, its enabling switches and the external enabling are ANDed.

Function (only active for T1 and T2)	External enabling switch	Switch position
Safety stop 2 (safe operational stop, drives switched on)	Input open	Not actuated or panic position
Axes enabled (axis jogging possible)	Input closed	Center position

5.9.8.2 Safety interface XG11.1

Description

2 safe inputs and 1 safe output are made available via safety interface XG11.1. EMERGENCY STOP devices must be connected via safety interface XG11.1 or linked together by means of higher-level controllers (e.g. PLC).

Take the following points into consideration when wiring safety interface XG11.1:

- System concept
- Safety concept

Necessary equipment

- Phoenix 1053815 connector
- Cable clamping range: 0.2 - 1.5 mm^2
- Recommended cable cross-section: 0.5 mm^2

Contact diagram

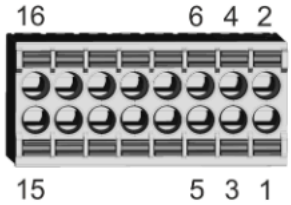

Fig. 5-22: Contact diagram

Connector pin allocation

Pin	Description
1	External EMERGENCY STOP IN_A0
2	Operator safety IN_A1
3	External EMERGENCY STOP TA_B
4	Operator safety TA_B
5	External EMERGENCY STOP TA_A

Pin	Description
7	External EMERGENCY STOP IN_B0
8	Operator safety TA_A
10	Operator safety IN_B1
11	Local EMERGENCY STOP (floating contact) KL23_A
14	Local EMERGENCY STOP (floating contact) KL34_B
15	Local EMERGENCY STOP (floating contact) KL33_B
16	Local EMERGENCY STOP (floating contact) KL24_A

The voltage switched with the safe outputs must be generated through a safely isolated PELV power supply unit according to EN 60950-1 with a rated voltage of 24 V ± 10%.
The following conditions must be met:

- Maximum load voltage at the power contacts: 30 V DC
- Load current per power contact : min. 10 mA DC
- Maximum load current per power contact: 750 mA DC
- If an inductive load is connected, an arc quenching device must be used to protect the contacts.

The maximum permissible cable length of a connected interface is 50 m.

5.9.8.3 Wiring examples for safe inputs and outputs

Safe input

The switch-off capability of the inputs is monitored cyclically.

The inputs are of dual-channel design with external testing. The dual-channel operation of the inputs is monitored cyclically.

The following diagram illustrates the connection of a safe input to a floating contact provided by the customer.

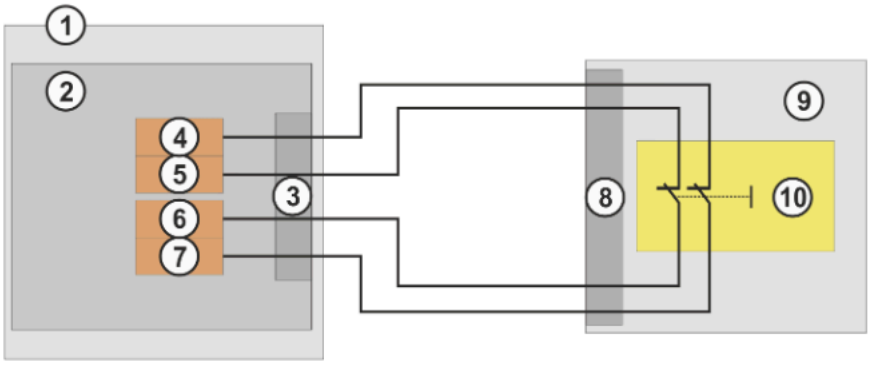

Fig. 5-23: Connection schematic for safe input

1 Robot controller
2 SCU-6-1S
3 Interface XG11.1 or XG58
4 Input X, channel A (IN_A[x])
5 Input X, channel B (IN_B[x])
6 Test output channel B (TA_B)
7 Test output channel A (TA_A)
8 Interface XG11.1
9 System side
10 Floating contact, input X

Test outputs A and B are supplied with power internally via the power supply unit on the FCU. Test outputs A and B are sustained short-circuit proof. The test outputs must only be used as described in (>>> *Fig. 5-23*) and are not permitted for any other purpose.

The wiring example described can be used to achieve compliance with Category 3 and Performance Level (PL) d according to EN ISO 13849-1.

Dynamic testing

- The switch-off capability of the inputs is tested cyclically. For this, the test outputs TA_A and TA_B are switched off alternately.
- The switch-off pulse length is set to 600 µs.
- The duration t2 between two switch-off pulses on one channel is < 1 s.
- The input channel IN_A[x] must be supplied by the test signal TA_A. The input channel IN_B[x] must be supplied by the test signal TA_B. No other power supply is permissible.
- It is only permitted to connect sensors which allow the connection of test signals and which provide floating contacts.
- The signals TA_A and TA_B must not be significantly delayed by the switching element.

Switch-off pulse diagram

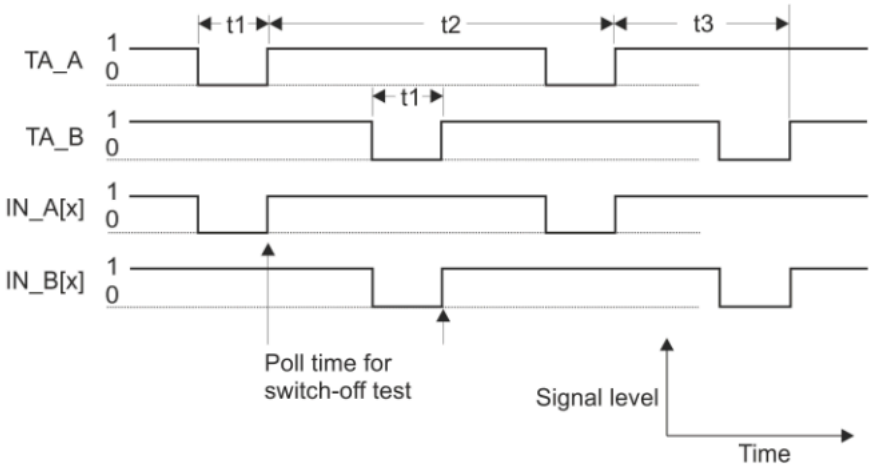

Fig. 5-24: Switch-off pulse diagram, test outputs

t1	Switch-off pulse length (600 µs)
t2	Switch-off period per channel (< 1 s)
t3	Offset between switch-off pulses of both channels (50 ms)
TA_A	Test output channel A
TA_B	Test output channel B
IN_A[x]	Input X, channel A
IN_B[x]	Input X, channel B

Safe output

Outputs are provided as dual-channel floating relay outputs.

The following diagram illustrates the connection of a safe output to a safe input provided by the customer with external test facility. The input used by the customer must be monitored externally for cross-connection.

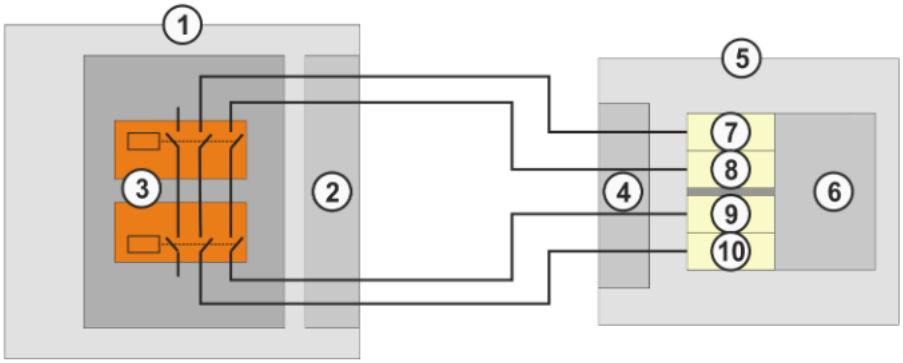

Fig. 5-25: Connection schematic for safe output

1 Robot controller
2 Interface XG11.1
3 Output wiring
4 Interface XG11.1
5 System side
6 Safe input
7 Test output channel A

8 Test output channel B
9 Input X, channel B
10 Input X, channel A

The wiring example described can be used to achieve compliance with Category 3 and Performance Level (PL) d according to EN ISO 13849-1.

5.9.9 Safety functions via Ethernet safety interface (optional)

Description

The exchange of safety-relevant signals between the controller and the system is carried out via the Ethernet safety interface (e.g. PROFIsafe or CIP Safety). The assignment of the input and output states within the Ethernet safety interface protocol are listed below. In addition, non-safety-oriented information from the safety controller is sent to the non-safe section of the higher-level controller for the purpose of diagnosis and control.

Reserved bits

Reserved safety-oriented inputs can be pre-assigned by a PLC with the values **0** or **1**. In both cases, the manipulator will move. If a safety function is assigned to a reserved input (e.g. in the case of a software update) and if this input is preset with the value **0**, then the manipulator either does not move or comes unexpectedly to a standstill.

KUKA recommends pre-assignment of the reserved inputs with **1**. If a reserved input has a new safety function assigned to it, and the input is not used by the customer's PLC, the safety function is not activated. This prevents the safety controller from unexpectedly stopping the manipulator.

Input byte 0

Bit	Signal	Description
0	RES	Reserved 1 The value **1** must be assigned to the input.
1	NHE	Input for external Emergency Stop **0** = external E-STOP is active **1** = external E-STOP is not active
2	BS	Operator safety **0** = operator safety is not active, e.g. safety gate open **1** = operator safety is active

Bit	Signal	Description
3	QBS	Acknowledgement of operator safety Precondition for acknowledgment of operator safety is the signal "Operator safety active" set in the BS bit. **Note:** If the “BS” signal is acknowledged by the system, this must be specified under **Hardware options** in the safety configuration. Information is contained in the Operating and Programming Instructions for System Integrators. **0 =** operator safety has not been acknowledged Edge **0 ->1 =** operator safety has been acknowledged
4	SHS1	Safety STOP 1 (all axes) • FF (motion enable) is set to **0**. • Voltage US2 is switched off. • AF (drives enable) is set to **0** after 1.5 s. Cancelation of this function does not require acknowledgement. This function is not permissible for the EMERGENCY STOP function. **0 =** safety stop is active **1 =** safety stop is not active
5	SHS2	Safety STOP 2 (all axes) • FF (motion enable) is set to **0**. • Voltage US2 is switched off. Cancelation of this function does not require acknowledgement. This function is not permissible for the EMERGENCY STOP function. **0 =** safety stop is active **1 =** safety stop is not active
6	RES	-
7	RES	-

Input byte 1

Bit	Signal	Description
0	US2	Supply voltage US2 (signal for switching the second supply voltage, US2, without battery backup) If this output is not used, it should be set to 0. **0** = switch off US2 **1** = switch on US2 **Note:** Whether and how input US2 is used must be specified under **Hardware options** in the safety configuration. Information is contained in the Operating and Programming Instructions for System Integrators.
1	SBH	Safe operational stop (all axes) Prerequisite: All axes are stationary Cancelation of this function does not require acknowledgement. This function is not permissible for the EMERGENCY STOP function. **0** = safe operational stop is active. **1** = safe operational stop is not active.
2	RES	Reserved 11 The value **1** must be assigned to the input.
3	RES	Reserved 12 The value **1** must be assigned to the input.
4	RES	Reserved 13 The value **1** must be assigned to the input.
5	RES	Reserved 14 The value **1** must be assigned to the input.
6	RES	Reserved 15 The value **1** must be assigned to the input.
7	SPA	System Powerdown Acknowledge The system confirms that it has received the powerdown signal. A second after the “SP” (System Powerdown) signal has been set by the controller, the requested action is executed, without the need for confirmation from the PLC, and the controller shuts down. **0** = confirmation is not active **1** = confirmation is active

Output byte 0

Bit	Signal	Description
0	NHL	Local E-STOP (local E-STOP triggered) **0** = local E-STOP is active **1** = local E-STOP is not active
1	AF	Drives enable (the internal safety controller of the robot controller has enabled the drives so that they can be switched on) **0** = drives enable is not active (the robot controller must switch the drives off) **1** = drives enable is active (the robot controller must switch the drives to servo-control)
2	FF	Motion enable (the internal safety controller of the robot controller has enabled robot motions) **0** = motion enable is not active (the robot controller must stop the current motion) **1** = motion enable is active (the robot controller may trigger a motion)
3	ZS	The signal ZS (enabling) is set to **1** (active) if the following conditions are met: • One of the enabling switches on the smartPAD is in the center position (enabling signal has been issued). • T1 or T2 mode • External enabling signal has been issued (signal ZSE1/ZSE2). • Robot can be moved (no external EMERGENCY STOP, safety stop, etc.).
4	PE	The signal “Peri enabled” is set to **1** (active) if the following conditions are met: • Drives are switched on. • Safety controller motion enable signal present. • The message “Operator safety open” must not be active.
5	AUT	The manipulator is in AUT or AUT EXT mode. **0** = AUT or AUT EXT mode is not active **1** = AUT or AUT EXT mode is active
6	T1	The manipulator is in Manual Reduced Velocity mode. **0** = T1 mode is not active **1** = T1 mode is active
7	T2	The manipulator is in Manual High Velocity mode. **0** = T2 mode is not active **1** = T2 mode is active

Output byte 1

Bit	Signal	Description
0	NHE	External E-STOP has been triggered. **0** = external E-STOP is active **1** = external E-STOP is not active
1	BSQ	Operator safety acknowledged **0** = operator safety is not assured **1** = operator safety is assured (input BS = 1 and, if configured, input QBS acknowledged)
2	SHS1EXT	External safety STOP 1 (all axes) **0** = external safety STOP 1 is not active **1** = external safety STOP 1 is active (input SHS1 = 0, safe state reached)
3	SHS2EXT	External safety STOP 2 (all axes) **0** = external safety STOP 2 is not active **1** = external safety STOP 2 is active (input SHS2 = 0, safe state reached)
4	RES	Reserved 13
5	RES	Reserved 14
6	PSA	Safety interface active Precondition: an Ethernet interface must be installed on the controller, e.g. PROFINET or EtherNet/IP. **0** = safety interface is not active **1** = safety interface is active
7	SP	System Powerdown (controller will be shut down) One second after the SP signal has been set, the PSA output is reset by the robot controller, without confirmation from the PLC, and the controller is shut down. **0** = controller on safety interface is active. **1** = controller will be shut down

5.9.10 XG33 Fast Measurement inputs

Description

Fast Measurement interface XG33 can be used to program commands in the robot controller for measuring workpieces using digital sensors.

Additionally, the “Drives ready” lamp can be connected via interface XG33.

Interface XG33 is located on the connection panel of the robot controller.

Necessary equipment

- Connector: Phoenix 1053810
- Cable clamping range: 0.2 - 1.5 mm^2
- Recommended cable cross-section: 0.5 mm^2

Contact diagram

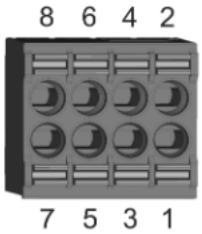

Fig. 5-26: Contact diagram

Connector pin allocation

Pin	Description
1	+27 V, max. 400 mA
2	PSU GND
3	Fast Measurement 1
4	Fast Measurement 2
5	Fast Measurement 3
7	+24 V “Drives ready” lamp connection (optional)
8	0 V “Drives ready” lamp connection (optional)

Fast Measurement inputs

Switching level of the inputs	The state for the inputs is not defined for the voltage range from 5 V to 11 V (transition range). Either the ON state or the OFF state is set. • Signal Off / 0: OFF state for the voltage range from -3 V to 5 V (OFF range). • Signal On / 1: ON state for the voltage range from 11 V to 30 V (ON range).
Load current at the input (Signal On / 1)	6 … 13 mA

The maximum permissible cable length of a connected interface is 50 m.

5.9.10.1 Power supply for Fast Measurement

Description

The sensors for Fast Measurement are supplied with power internally via XG33.

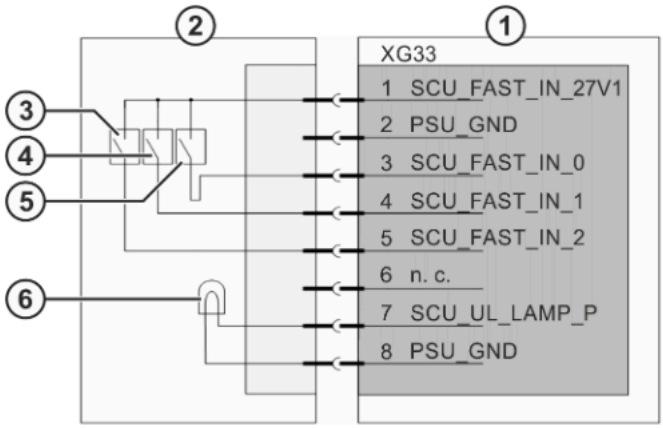

Fig. 5-27: Fast Measurement and “Drives ready” lamp

1	Robot controller XG33	4	Sensor 2
2	System side	5	Sensor 3
3	Sensor 1	6	“Drives ready” lamp (optional)

5.9.11 Connecting data cables XF21

Description

Communication to the RDC box is carried out via interface XF21.

Additionally, the interface provides the voltage for supplying the RDC box and the I/O interface on the robot.

Fig. 5-28: Contact diagram

Connector pin allocation XF21

Pin	Description
1	EtherCAT connection LAN_RX+
2	EtherCAT connection LAN_RX-
3	EtherCAT connection LAN_TX+
4	EtherCAT connection LAN_TX-
5	+27 V / 3 A PSU_27V1_OUT_IO Additional power supply

Pin	Description
6	PSU_GND Additional power supply
7	+27 V PSU_27V1_OUT_POS Power supply for RDC (with battery backup)
8	PSU_GND Power supply for RDC (with battery backup)
Shield	PE

The maximum permissible cable length of a connected interface is 50 m.

5.9.12 XD20.1 and XD20.2 motor interface

Description

The motors and brakes of the robot axes are connected to the robot controller via motor connectors XD20.1 and XD20.2. The two motor connectors are identical in design and are distinguished from one another by different non-interchangeable codings (type A and type B).

Contact diagram

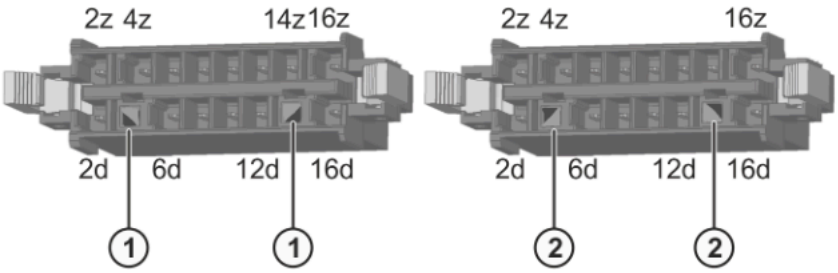

Fig. 5-29: Contact diagram

1	Coding for XD20.1 (type A)
2	Coding for XD20.2 (type B)

Connector pin allocation XD20.1

Pin	Description
16d	Motor M3 U1
16z	Motor M3 V1
12d	Motor M3 W1
12z	Motor M2 U1
10d	Motor M2 V1
10z	Motor M2 W1
8d	Motor M1 U1
8z	Motor M1 V1
6d	Motor M1 W1
6z	PE

Pin	Description
2d	Brake, axes 1-3, 24 V
2z	Brake, axes 1-3, GND
14z	PE
4z	PE

Connector pin allocation XD20.2

Pin	Description
16d	Brake, axes 4-6, 24 V
16z	Brake, axes 4-6, GND
12d	Motor M4 U1
12z	PE
10d	Motor M4 V1
10z	Motor M4 W1
8d	Motor M5 U1
8z	Motor M5 V1
6d	Motor M5 W1
6z	Motor M6 U1
2z	Motor M6 W1
2d	Motor M6 V1
14z	PE
4z	PE

5.10 Performance level

The safety functions of the robot controller conform to Category 3 and Performance Level d according to EN ISO 13849-1.

5.10.1 PFH values of the safety functions

The safety values are based on a service life of 20 years.

The PFH value classification of the controller is only valid if the EMERGENCY STOP device and the enabling switches on the smartPAD are tested at least once every 12 months.

When evaluating system safety functions, it must be remembered that the PFH values for a combination of multiple controllers may have to be taken into consideration more than once. This is the case for RoboTeam systems or higher-level hazard areas. The PFH value determined for the safety function at system level must not exceed the limit for PL d.

The PFH values relate to the specific safety functions of the different controller variants.

Safety function groups:

- Standard safety functions
  - Operating mode selection
  - Operator safety
  - EMERGENCY STOP device
  - Enabling device

  - External safe operational stop
  - External safety stop 1
  - External safety stop 2
  - Velocity monitoring in T1
- Safety functions of KUKA Safe Robot Technology (optional)
  - Monitoring of axis spaces
  - Monitoring of Cartesian spaces
  - Monitoring of axis velocity
  - Monitoring of Cartesian velocity
  - Monitoring of axis acceleration
  - Safe operational stop
  - Tool monitoring

Overview of controller variant PFH values:

Robot controller variant	PFH value
KR C5 micro	$< 1 \times 10^{-7}$

For controller variants that are not listed here, please contact KUKA Deutschland GmbH.

6 Transportation

6.1 Transportation with trolley

Preconditions

- The housing of the robot controller must be closed.
- No cables may be connected to the robot controller.

Procedure

- Transport the robot controller horizontally on a trolley.

NOTICE

Damage to property due to incorrect transportation
The robot controller must be protected from excessive shock loads during transportation. The load limits must not be exceeded during transportation.

- If more severe mechanical stress is expected, the robot controller must be installed on anti-vibration components.

7 Start-up and recommissioning

7.1 Start-up overview

This is an overview of the most important steps during start-up. The precise sequence depends on the application, the manipulator type, the technology packages used and other customer-specific circumstances. For this reason, the overview does not claim to be comprehensive.

This overview refers to the start-up of the industrial robot. The start-up of the overall system is not within the scope of this documentation.

Manipulator

Step	Description	Information
1	Carry out a visual inspection of the manipulator.	Detailed information is contained in the operating or assembly instructions for the manipulator, in the chapter “Start-up and recommissioning”.
2	Install the manipulator mounting base (mounting base, machine frame mounting or booster frame).	
3	Install the manipulator.	

Electrical system

Step	Description	Information
4	Carry out a visual inspection of the robot controller.	-
5	Make sure that no condensation has formed in the robot controller.	-
6	Install the strain relief device.	(>>> *10.1.1 "Installing the strain relief device" Page 111*)
7	Install the robot controller.	(>>> *7.2 "Installing the robot controller" Page 99*)
8	Connect the equipotential bonding between the manipulator and the robot controller.	(>>> *5.5 "PE equipotential bonding" Page 64*)
9	Connect the connecting cables.	(>>> *7.3 "Connecting the connecting cables and ground conductor" Page 100*)
10	Plug in the KUKA smartPAD.	(>>> *7.4 "Plugging in the KUKA smartPAD" Page 101*)
11	Connect the robot controller to the power supply.	(>>> *7.5 "Connecting the mains power supply" Page 101*)
12	Connect 24 V for UPS.	(>>> *7.6 "Connecting the UPS" Page 101*)
13	Configure and connect safety interface XG11.1.	(>>> *7.7 "Configuring and connecting safety interface XG11.1" Page 102*)
14	Connect interface XG58.	(>>> *7.8 "Configuring and connecting safety interface XG58" Page 102*)
15	Connect Ethernet and EtherCAT interfaces.	(>>> *5.9.3 "Interfaces XF1 - XF8" Page 71*)

Step	Description	Information
16	Connect optional interfaces.	-
17	Switch on the robot controller.	(>>> *7.9 "Switching on the robot controller" Page 102*)
18	Establish connection to WorkVisual.	Detailed information is contained in the “Start-up” chapter of the WorkVisual documentation.
19	Configure the inputs/outputs between the robot controller and the periphery.	Detailed information is contained in the “Configuration of the KUKA buses” chapter of the WorkVisual documentation.
20	Check the safety equipment.	Detailed information is contained in the operating and assembly instructions for the robot controller, in the “Safety” chapter.

Software

Step	Description	Information
21	Check the machine data.	Detailed information is contained in the operating and programming instructions.
22	Master the manipulator without a load.	
23	Mount the tool and master the manipulator with a load.	
24	Check the software limit switches and adapt them if required.	
25	Calibrate the tool. In the case of a fixed tool: calibrate external TCP.	
26	Enter the load data.	
27	Calibrate the base (optional). In the case of a fixed tool: calibrate workpiece (optional).	
28	If the manipulator is to be controlled by a host computer or PLC: configure the Automatic External interface.	Detailed information is contained in the Operating and Programming Instructions for System Integrators.

Accessories

Precondition: the manipulator is ready to move, i.e. the software start-up has been carried out up to and including the item “Master the manipulator without load”.

Description	Information
Optional: install and adjust external energy supply system, taking the programming into consideration.	Detailed information can be found in the energy supply system documentation.
Positionally accurate manipulator option: check data.	

7.2 Installing the robot controller

Description

The robot controller can be operated if the following installation conditions are met:

- Horizontal position as standalone variant, with or without holders
- Vertical position as standalone variant, with holders
- Stackable using holders
- Insertion in 19" rack
- Installation on a mounting plate as panel-mounted variant, or directly on a wall
  - Flat installation on wall (>>> *Fig. 5-5*)
  - Vertical installation on wall (>>> *Fig. 5-6*)

Precondition

- The minimum clearances to walls, other cabinets, etc. must be observed. (>>> *5.3 "Installation conditions" Page 58*)
- In the case of installation on a wall or mounting plate, the dimensions of the drilling templates must be observed. (>>> *5.4 "Installation with holders" Page 62*)
- In the case of installation on a wall or mounting plate, the minimum clearances must be observed and it must be ensured that all switches and connectors are freely accessible.
- In the case of installation on a wall or mounting plate, it must be ensured that the air inlet for cooling is on the underside.
- In the case of installation on a wall or mounting plate, it must be ensured that there is a clear view of the front side of the robot controller.

NOTICE

Damage to property due to build-up of discharged heat
If the heat discharged by the robot controller is not dissipated, this may lead to unintentional shutdowns or a shortened service life of the robot controller.

- Position the robot controller in such a way that the discharged heat cannot accumulate.

Procedure

1. Check the robot controller for any damage caused during transportation.
2. Depending on the installation position, mount the 4 holders on both sides of the robot controller.

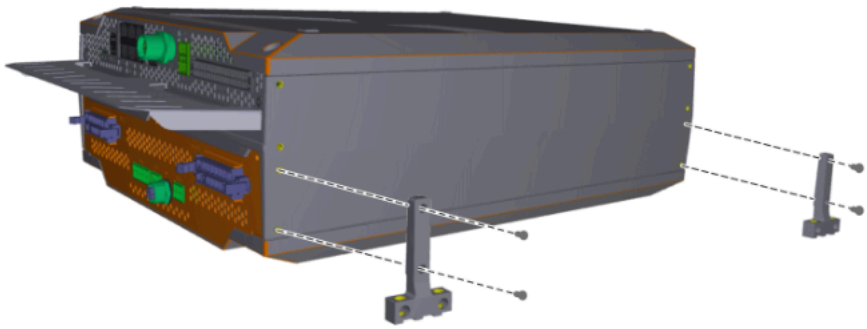

Fig. 7-1: Installing the holders (example)

3. Install the robot controller. (>>> *5.3 "Installation conditions" Page 58*)

7.3 Connecting the connecting cables and ground conductor

DANGER

Risk of injury due to damaged cables
Cables can be damaged if not installed correctly. Death, injuries or damage to property may result.

- Route electric cables in such a way that they cannot be damaged by sharp edges, tools or other materials.

CAUTION

Risk of injury due to tripping hazards
Improper installation of cables can cause tripping hazards. Injuries or damage to property may result.

- The connecting cables must be installed in such a way (e.g. cable ducts) as to prevent tripping hazards.
- Potential tripping hazards must be marked accordingly.

Overview

A cable set is supplied with the robot system. In the standard version the cable set consists of:

- Motor cable
- Data cable
- Power supply cable
  (>>> *5.8 "Power supply connection" Page 67*)
- Connector bypack for standard interfaces (data/safety interfaces)
  (>>> *5.9 "Overview of interfaces" Page 67*)

Ground conductor is not included in the cable set, but must be connected.
(>>> *5.5 "PE equipotential bonding" Page 64*)

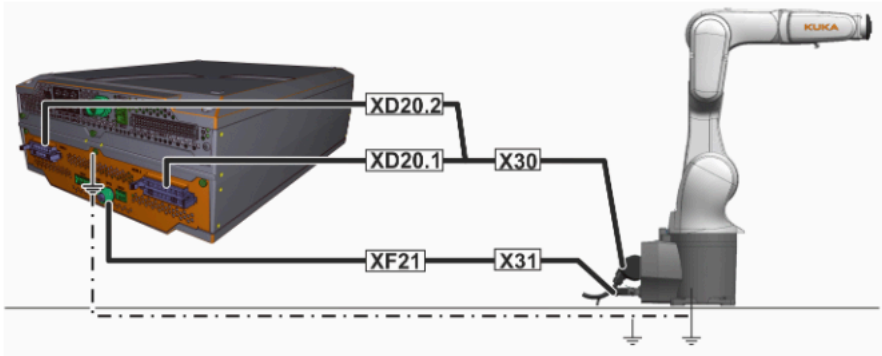

Fig. 7-2: Connecting cables, connection to robot

Procedure

1. Connect the ground conductor. (>>> *5.5 "PE equipotential bonding" Page 64*)
2. Connect the data cable and motor cable.

7.4 Plugging in the KUKA smartPAD

Description

The KUKA smartPAD is connected to interface XG19.

Procedure

- Plug the KUKA smartPAD into XG19 on the robot controller.

WARNING

Risk of fatal injury due to non-operational EMERGENCY STOP device
If the smartPAD is disconnected, the system can no longer be switched off by means of the EMERGENCY STOP device on the smartPAD. Measures must be taken to prevent operational and non-operational EMERGENCY STOP devices from being mixed up.
Death, injuries or damage to property may result.

- Connect an external EMERGENCY STOP to the robot controller.
- Remove the disconnected smartPAD from the system immediately.

The function test for all enabling switches must be carried out before start-up and at least once every 12 months.

7.5 Connecting the mains power supply

Description

The robot controller may only be connected to the mains via the device connection cable included in the scope of supply or the mains connector included in the scope of supply.

Precondition

- The robot controller is switched off.
- The power cable is deenergized.

Procedure

- Connect the robot controller to the power supply via XD1.

7.6 Connecting the UPS

Description

Operation of the uninterruptible power supply (UPS) requires the connection of an external 24 V power supply to the robot controller. The following options are available:

- Connection via an externally connected battery (UPS batterypack 24V)
- Connection via a central 24 V connection

If using UPS batterypack 24V: Detailed information is contained in the UPS batterypack 24V documentation.

Precondition

- The robot controller is switched off.

Procedure

- Connect 24 V power supply to the robot controller via XD2.

7.7 Configuring and connecting safety interface XG11.1

Precondition

- The robot controller is switched off.

Procedure

1. Configure connector XG11.1 in accordance with the system and safety concepts. (>>> *5.9.8.2 "Safety interface XG11.1" Page 81*)
2. Connect interface connector XG11.1 to the robot controller.

NOTICE

Damage to property due to plugging or unplugging of live connectors
Connector XG11.1 may only be plugged in or unplugged when the robot controller is switched off. If connector XG11.1 is plugged in or unplugged when energized, damage to property may occur.
- Switch the robot controller off.

7.8 Configuring and connecting safety interface XG58

Precondition

- The robot controller is switched off.

Procedure

1. Configure connector XG58 in accordance with the system and safety concepts. (>>> *5.9.8.1 "Interface XG58, external enabling switch" Page 79*)
2. Connect interface connector XG58 to the robot controller.

NOTICE

Damage to property due to plugging or unplugging of live connectors
Connector XG58 may only be plugged in or unplugged when the robot controller is switched off. If connector XG58 is plugged in or unplugged when energized, damage to property may occur.
- Switch the robot controller off.

7.9 Switching on the robot controller

Preconditions

- The manipulator has been installed in accordance with the operating instructions.
- Visual inspection: The robot controller, cables and manipulator are undamaged.
- All electrical connections are correctly connected and secured at the strain relief device to prevent unintentional disconnection.
- The housing of the robot controller is closed.
- The peripheral devices are correctly connected.

- It must be ensured that no persons or objects are present within the danger zone of the manipulator.
- All safety devices and protective measures are complete and fully functional.
- The internal temperature of the robot controller must have adapted to the ambient temperature.

Procedure

1. Release the EMERGENCY STOP device on the smartPAD.
2. Switch on the device switch.

   The control PC begins to run up (load) the operating system and the control software.

Further information about the functions and operator control of the smartPAD-2 can be found in the operating instructions of the smart-PAD-2 and in the operating and programming instructions of the KUKA System Software.

7.10 Concluding work

The following concluding work must be carried out:

- Move the manipulator and look out for irregularities.

8 Operation

8.1 Switching on the robot controller

Preconditions

- The manipulator has been installed in accordance with the operating instructions.
- Visual inspection: The robot controller, cables and manipulator are undamaged.
- All electrical connections are correctly connected and secured at the strain relief device to prevent unintentional disconnection.
- The housing of the robot controller is closed.
- The peripheral devices are correctly connected.
- It must be ensured that no persons or objects are present within the danger zone of the manipulator.
- All safety devices and protective measures are complete and fully functional.
- The internal temperature of the robot controller must have adapted to the ambient temperature.

Procedure

1. Release the EMERGENCY STOP device on the smartPAD.
2. Switch on the device switch.

   The control PC begins to run up (load) the operating system and the control software.

Further information about the functions and operator control of the smartPAD-2 can be found in the operating instructions of the smartPAD-2 and in the operating and programming instructions of the KUKA System Software.

8.2 Function of soft power button

Description

- Pressing briefly while robot controller is switched on:

  The robot controller shuts down.
- Pressing briefly if the robot controller is in cold start, sleep mode (hibernate) or energy-saving mode:

  The robot controller is restarted.
- Pressing for longer (at least 5 seconds) while robot controller is switched on:

  The robot controller carries out a hard power-off without shutting down.

A hard power-off of the robot controller should be avoided. Powering off without a normal shutdown can destroy the installation.

9 Maintenance

Description

Maintenance work must be performed at the specified maintenance intervals after commissioning at the customer's plant.

Precondition

- The robot controller must be switched off and secured to prevent unauthorized persons from switching it on again.
- Power supply lead disconnected.
- Wait 5 minutes until the intermediate circuit has discharged.

WARNING

Danger to life and limb due to high intermediate circuit voltages
Some components may remain energized (60 … 450 V) up to 5 minutes after the robot controller has been switched off. Death, severe injuries or damage to property may result.

- After switching off, wait at least 5 minutes until the intermediate circuit has discharged.

  The following components may remain energized for up to 5 minutes:

  - KSP-300
  - Connections for motor connector and connected motor cables

Maintenance symbols

The overview may contain maintenance symbols that are not relevant for the maintenance work on this product. The maintenance illustrations provide an overview of the relevant maintenance work.

Oil change

Lubricate with grease gun

Lubricate with brush

Lubricate with spray grease

Tighten screw/nut

Check component, visual inspection

Clean component

Exchange battery

Exchange component

Check toothed belt tension

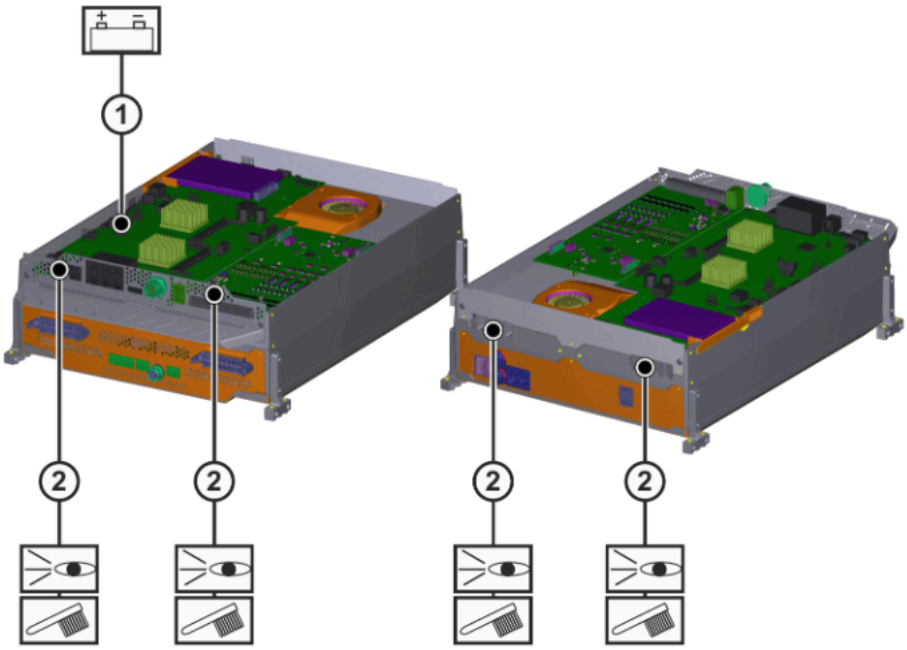

Fig. 9-1: Maintenance diagram

Interval	Item	Activity
1 year	-	Cyclical function test of operator safety and all EMERGENCY STOP devices (e.g. smartPAD, external EMERGENCY STOP devices, etc.)
	-	Perform function test of all enabling switches on the smartPAD.
	-	Function test of external enabling devices
1 year at the latest	2	Depending on installation conditions and degree of fouling, clean the protective grille of the fan with a brush.
10 years	1	Exchange the motherboard battery. (>>> *10.4 "Exchanging the motherboard battery" Page 116*)

If an activity from the maintenance table is performed, a visual inspection must be made, with special attention to the following points:

- Check that plug connections are securely fastened.
- Check PE equipotential bonding connection.
- Check all system components for wear and damage.

9.1 Cleaning the robot controller

Precondition

- The robot controller must be switched off and secured to prevent unauthorized persons from switching it on again.
- Power supply lead disconnected.
- Wait 5 minutes until the intermediate circuit has discharged.

Work safety

WARNING

Danger to life and limb due to high intermediate circuit voltages
Some components may remain energized (60 … 450 V) up to 5 minutes after the robot controller has been switched off. Death, severe injuries or damage to property may result.

- After switching off, wait at least 5 minutes until the intermediate circuit has discharged.

  The following components may remain energized for up to 5 minutes:

  - KSP-300
  - Connections for motor connector and connected motor cables

WARNING

Risk of fatal injury from voltage
The device switch on the robot controller does not have a grid isolation function. Failure to take this into consideration may result in severe injuries or even death.

- Before undertaking work on the robot controller, the power cable on the robot controller must be disconnected.
- Store the disconnected power cable out of sight and reach of personnel working on the robot controller.
- Use a sign to inform the individuals involved that the robot controller is switched off (e.g. by affixing a warning sign).

NOTICE

Damage to or destruction of components due to electrostatic discharge (ESD)
Electrostatic discharge during installation or removal work can result in destruction or partial damage to electronic components.

- Observe the ESD guidelines.

Work regulations

- The manufacturer's instructions must be observed when using cleaning agents for cleaning work.
- It must be ensured that no cleaning agents enter electrical components.
- Do not use compressed air during cleaning work.
- Do not spray with water.

Procedure

1. Loosen and vacuum up any dust deposits.
2. Clean the housing of the robot controller with a cloth soaked with a mild cleaning agent.
3. Clean cables, plastic parts and hoses with a solvent-free cleaning agent.
4. Replace damaged, illegible or missing identifications, labels and plates.

10 Repair

10.1 Exchanging the strain relief device

Description

The following sections describe the procedure for installation and removal of the strain relief device on the KR C5 micro.

Plug connections can come loose or angled connectors can break off if subjected to excessive strain. It is recommended that the cables of all connectors are fastened to the strain relief device.

Equipment

The following equipment is required:

Designation	Article number
TORX screwdriver set TX10	-

Material

The following material is required:

Designation	Article number	Quantity
Supplied strain relief device with TORX screws	-	1

Work safety

There are no particular safety instructions to be observed.

10.1.1 Installing the strain relief device

Procedure

1. Fasten the strain relief device onto the robot controller with 3 TORX screws; tightening torque M_A= 0.6 Nm.

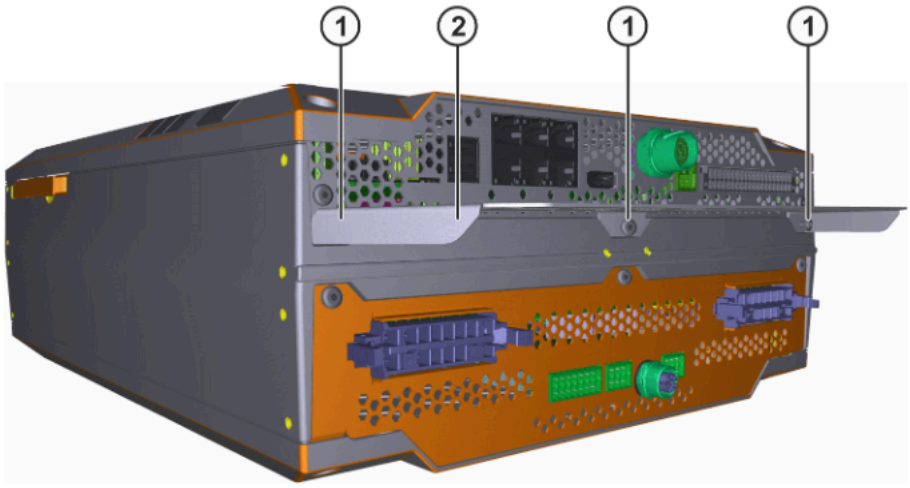

Fig. 10-1: Strain relief device

1 M3 TORX screws
2 Strain relief device

10.1.2 Removing the strain relief device

Procedure

1. Remove the cable strap.
2. Unscrew 3 TORX screws from the robot controller.

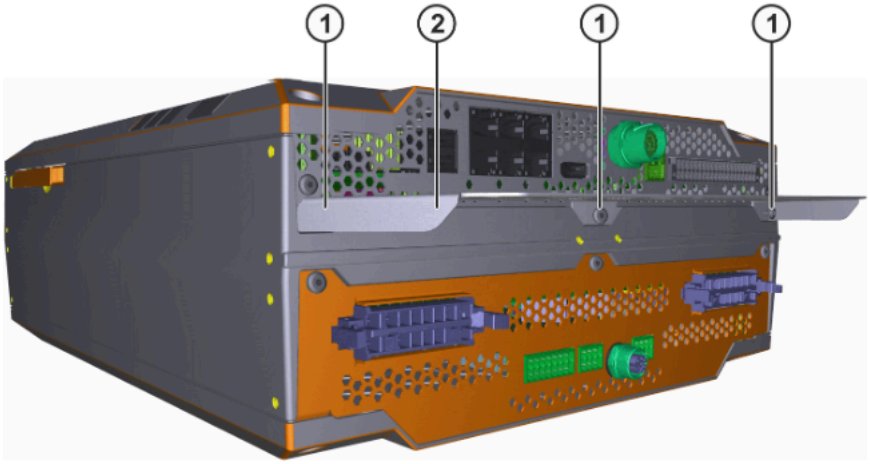

Fig. 10-2: Strain relief device

1 M3 TORX screws
2 Strain relief device

10.1.3 Concluding work

The following concluding work must be carried out after installation of the strain relief device:

- Check that the strain relief device is fitted securely.
- Fasten the cables of all connectors to the strain relief device using cable straps.

10.2 Exchanging the Mounting brackets 19" frame

Description

The following sections describe the procedure for installation and removal of the Mounting brackets 19" frame on the KR C5 micro.

Equipment

The following equipment is required:

Designation	Article number
TORX screwdriver set TX10	-

Material

The following material is required:

Designation	Article number	Quantity
Mounting brackets 19" frame	0000-346-287	1x

Work safety

There are no particular safety instructions to be observed.

10.2.1 Installing the Mounting brackets 19" frame

Procedure

1. Fasten the Mounting brackets 19" frame to the robot controller with 4 TORX screws; tightening torque M_A= 0.6 Nm.

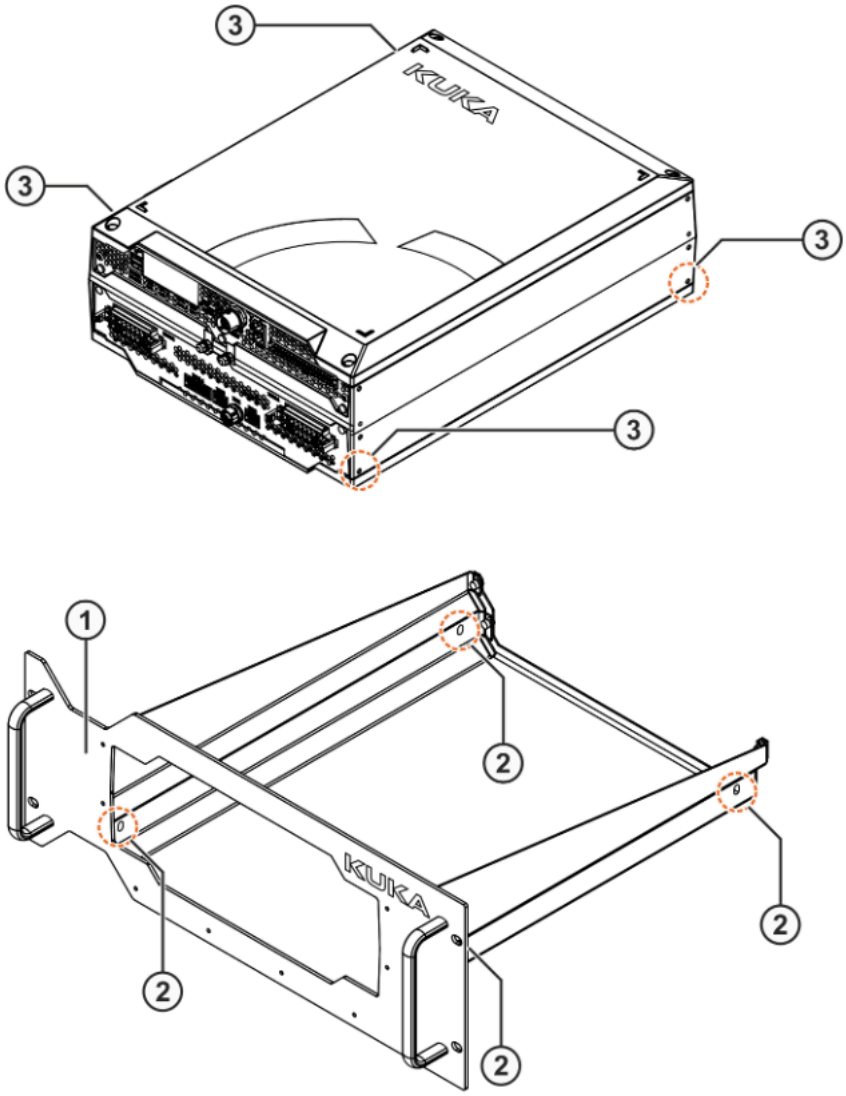

Fig. 10-3: Mounting brackets 19" frame

1 Mounting brackets 19" frame
2 Holes
3 Tapped holes

10.2.2 Removing the Mounting brackets 19" frame

Procedure

1. Unscrew 4 TORX screws from the robot controller.

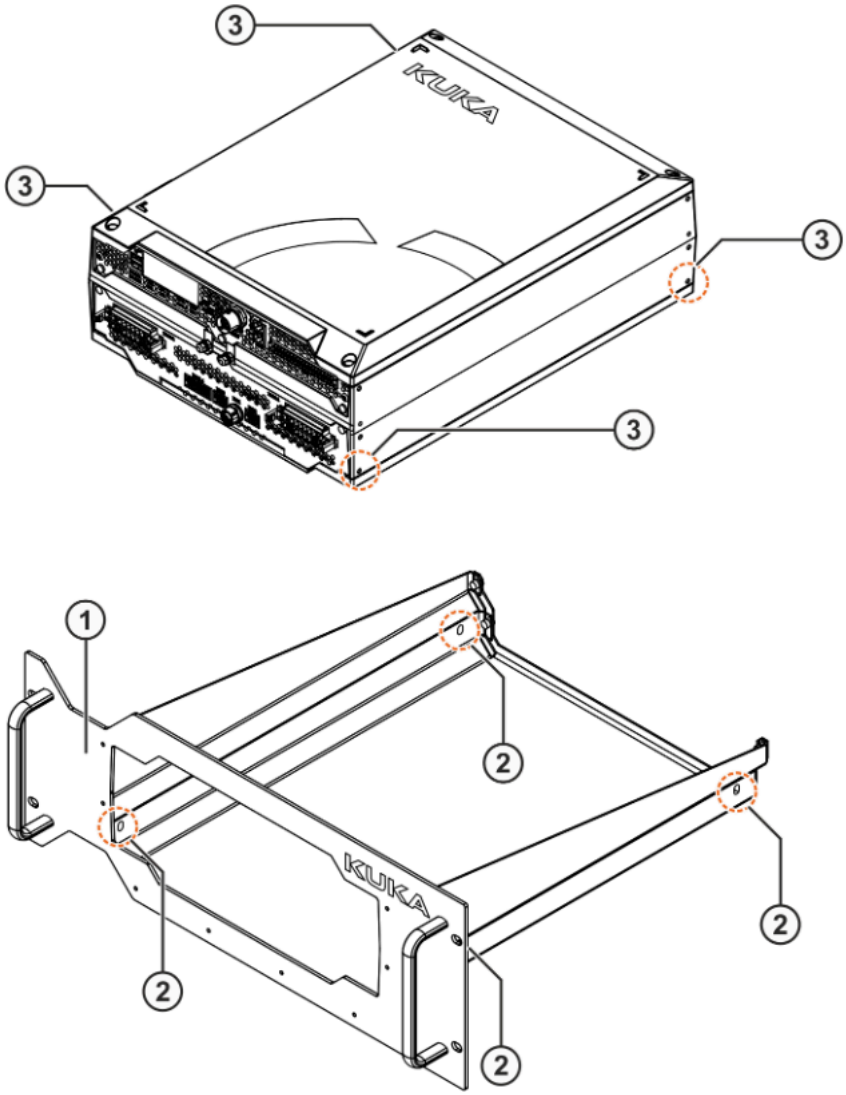

Fig. 10-4: Mounting brackets 19" frame

1 Mounting brackets 19" frame
2 Holes
3 Tapped holes

10.2.3 Concluding work

The following concluding work must be carried out after installation of the Mounting brackets 19" frame:

- Check that the Mounting brackets 19" frame is fitted securely.

10.3 Exchanging the SSD hard drive

Description

The following section describes the procedure for exchanging the SSD hard drive.

Equipment

No equipment is required.

Material

The following material is required:

Designation	Article number	Quantity
KR C5 SSD external 60GB	0000-281-418	1x

Work safety

There are no particular safety instructions to be observed.

10.3.1 Removing the SSD hard drive

Procedure

1. Unlock the locking device on the cover of the push-in module. The cover swings open.

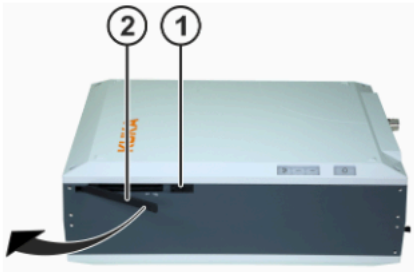

Fig. 10-5: Opening the SSD slot

1 Locking device 2 Cover

2. Open the cover completely. The SSD slot is accessible.
3. Pull out the SSD hard drive.

10.3.2 Installing the SSD hard drive

Procedure

1. Push the new SSD hard drive into the slot as far as it will go.
2. Close the cover. This pushes the SSD hard drive into its final position and it clicks into place.
3. Lock the cover.

10.3.3 Concluding work

After the SSD hard drive has been exchanged, the following tasks must be carried out:

Procedure

1. Switch on the robot controller and check the settings.
2. Carry out a function test.

10.4 Exchanging the motherboard battery

Description

The following sections describe the procedure for exchanging the motherboard battery.

Equipment

The following equipment is required:

Designation	Article number
TORX screwdriver set TX10	-
USB keyboard	-
ESD wrist strap	0000-121-401

Material

The following material is required:

Designation	Article number	Quantity
Lithium metal button cell CR2032	0000-101-677	1x

Procurement of spare parts

Defective components must only be replaced with original spare parts from KUKA Deutschland GmbH. Non-compliance nullifies warranty and liability claims.

A “Repair Card” is supplied with the exchange parts. This must be completed and returned to KUKA Deutschland GmbH together with the defective component in the following cases.

- Within the warranty period
- If, after consultation with KUKA Deutschland GmbH, an examination of the defective component by KUKA is required.

Precondition

- The robot controller must be switched off and secured to prevent unauthorized persons from switching it on again.
- Power supply lead disconnected.

Work safety

WARNING

Danger to life and limb when working on live parts
Before commencing work on live parts of the robot system and/or on electrical systems, measures must be taken to ensure that the 5 safety rules are followed. It is essential that the 5 safety steps are followed in the correct order. Death, severe injuries or damage to property may result.

1. De-energize
2. Secure against unintentional restart
3. Ensure that the system is de-energized
4. Ground and short-circuit the system
5. Cover or erect barriers around neighboring energized parts

Once the work is completed, tools and equipment must be removed and the measures rescinded in reverse sequence.

WARNING

Risk of fatal injury from voltage
The device switch on the robot controller does not have a grid isolation function. Failure to take this into consideration may result in severe injuries or even death.

- Before undertaking work on the robot controller, the power cable on the robot controller must be disconnected.
- Store the disconnected power cable out of sight and reach of personnel working on the robot controller.
- Use a sign to inform the individuals involved that the robot controller is switched off (e.g. by affixing a warning sign).

NOTICE

Damage to or destruction of components due to electrostatic discharge (ESD)
Electrostatic discharge during installation or removal work can result in destruction or partial damage to electronic components.

- Observe the ESD guidelines.

10.4.1 Removing the housing cover

Procedure

1. Undo 4 TORX screws.

Fig. 10-6: Housing cover screws

1 TORX screws

2. Open the housing cover.
3. Remove the plug connection from the controller.

Fig. 10-7: Housing cover cable

1 Plug connection

10.4.2 Removing the motherboard battery

Procedure

1. Push the retaining spring on the battery holder upwards with a small flat-blade screwdriver and remove the battery.

Fig. 10-8: Lithium button cell

1 Battery

10.4.3 Inserting the motherboard battery

Procedure

1. Label the new battery with the installation date and insert it into the battery holder. When the battery is inserted, the retaining spring must click into place.

Fig. 10-9: Lithium button cell

1 Battery

10.4.4 Installing the housing cover

Procedure

1. Insert the plug connection into the robot controller.

Fig. 10-10: Housing cover cable

1 Plug connection

2. Place the housing cover on the robot controller.
3. Fasten the housing cover onto the robot controller with 4 TORX screws; tightening torque M_A= 0.6 Nm.

Fig. 10-11: Housing cover screws

1 TORX screws (4x)

10.4.5 Concluding work

After the battery has been exchanged, the following tasks must be carried out:

Procedure

1. Plug in USB keyboard.
2. Open BIOS menu.
3. Set date and time.
4. Load default values.
5. Carry out a function test.

10.5 Exchanging the incoming supply fuse

Description

The following section describes the procedure for exchanging fuses F1 and F2 on the rear side of the robot controller.

Equipment

The following equipment is required:

Designation	Article number
Flat-blade screwdrivers	-

Material

The following material is required:

Designation	Article number	Quantity
Fuse t 10a (Minimum 10 pc.	0069-000-767	1x

Procurement of spare parts

Defective components must only be replaced with original spare parts from KUKA Deutschland GmbH. Non-compliance nullifies warranty and liability claims.

A “Repair Card” is supplied with the exchange parts. This must be completed and returned to KUKA Deutschland GmbH together with the defective component in the following cases.

- Within the warranty period
- If, after consultation with KUKA Deutschland GmbH, an examination of the defective component by KUKA is required.

Precondition

- The robot controller must be switched off and secured to prevent unauthorized persons from switching it on again.
- Power supply lead disconnected.

NOTICE

Damage to or destruction of components due to electrostatic discharge (ESD)
Electrostatic discharge during installation or removal work can result in destruction or partial damage to electronic components.

- Observe the ESD guidelines.

10.5.1 Exchanging the incoming supply fuse

Procedure

1. Switch off and disconnect the robot controller.
2. Open the cover of the defective fuse with a screwdriver and pull it out of the housing.
3. Exchange the fuse and reinstall.

10.5.2 Concluding work

After the fuses have been exchanged, the following tasks must be carried out:

Procedure

- Switch on the robot controller and check that it boots flawlessly.
- Execute the program in T1 mode.

11 Troubleshooting

11.1 KSP warning messages

Description

The warning messages have corresponding acknowledgement messages.

- In these messages, %1 stands for the device type (KSP).
- In these messages, %2 stands for the number of the drive or power supply (KSP).
- %3 stands for error codes for further differentiation of the cause of the error.

Error no.	Warning	Cause	Remedy
26103	Internal error, KSP (axis)	The device has detected an internal error.	• Reinitialize the drive bus: Power Off / Power On
26104	IxT overload error, KSP (axis)	Axis overloaded Mean continuous current too high Power or load too high	• During start-up => excessive load in program • Reinitialize the drive bus: Power Off / Power On • During operation – Modifications to system – Check machine – Temperature influences • Check trace recording of axis/current • Adapt program velocity • Check CBS pressure • Check gear unit
26105	Ground fault, KSP (axis)	Power unit overcurrent (ground fault)	• Check motor cable • Check motor • Reinitialize the drive bus: Power Off / Power On
26106	Overcurrent, KSP (axis)	Fault that briefly results in an overcurrent that exceeds the maximum current of the KSP (short-circuit,…)	• Check trace recording of axis/current • Check motor • Check motor cable • Reinitialize the drive bus: Power Off / Power On
26107	Intermediate circuit voltage too high, KSP (axis)	Overvoltage in intermediate circuit during operation	• Check trace recording of the intermediate circuit • Check mains voltage • Check brake resistor (interruption) • Excessive load during braking => reduce • Reinitialize the drive bus: Power Off / Power On

Error no.	Warning	Cause	Remedy
26108	Intermediate circuit voltage too low, KSP (axis)	Undervoltage in intermediate circuit during operation	• Check trace recording of the intermediate circuit • Check mains voltage • Reinitialize the drive bus: Power Off / Power On
26111	Device temperature too high, KSP (axis)	Overtemperature	• Check the fans • Check ambient temperature • Load in program too high, check load • Dirt in cooling circuit => clean • Reinitialize the drive bus: Power Off / Power On
26112	Heat sink temperature too high, KSP (axis)	Overtemperature of heat sink	• Check the fans • Check ambient temperature • Load in program too high, check and reduce load • Dirt in cooling circuit => clean • Check installation site, ventilation slits and clearance • Reinitialize the drive bus: Power Off / Power On
26113	Motor phase failure, KSP (axis)	Failure of motor phase	• Check motor cable • Check motor • Reinitialize the drive bus: Power Off / Power On
26114	Communication error, KSP (axis)	Communication error on the controller bus	• Reinitialize the drive bus: Power Off / Power On • Check EtherCAT cabling • Check EtherCAT stack
26117	Hardware fault, KSP (axis)	The device has detected an internal hardware fault.	• Reinitialize the drive bus: Power Off / Power On
26118	Mains phase failure, KSP (axis)	Failure of mains phase	• Check power lead • Reinitialize the drive bus: Power Off / Power On
26119	Power supply failure, KSP (axis)	Supply voltage failure	• Check power lead
26122	Fault in brake resistor, KSP (axis)	KSP has detected an error	• Check brake resistor
26123	Overload of brake resistor, KSP (axis)	Braking energy permanently too high	• Reduce heavy loads that are braked too frequently • Check brake resistor • Reinitialize the drive bus: Power Off / Power On

Error no.	Warning	Cause	Remedy
26131	Intermediate circuit charging failed, KSP (axis)	-	• Check intermediate circuit cabling • Reinitialize the drive bus: Power Off / Power On • Check mains connection • Check system impedance
26133	Group brake fault, KSP (axis)	Brake cable monitoring device has signaled short-circuit, overloading or break in connection. / short-circuit / overcurrent / no brake connected	• Check motor / brake (measure) • Check brake cable / motor cable • Reinitialize the drive bus: Power Off / Power On

11.2 Controller System Panel LED display

Overview

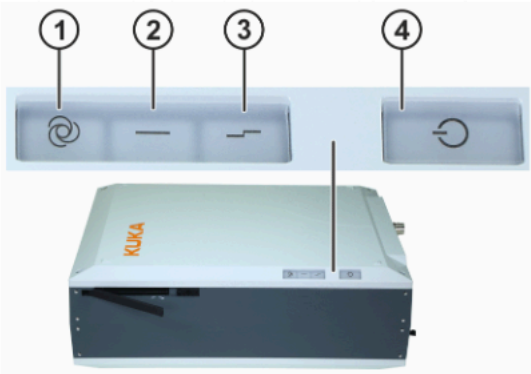

Fig. 11-1: Controller System Panel LED arrangement

Item	Element	Color	Meaning
1	LED1	White	Operating mode LED (Test or Automatic)
2	LED2	Green	Operating status LED
3	LED3	Red	Error LED
4	LED4 “soft power” button	White	Sleep LED

Controller state

Display	Description	State
	LED1...LED4 = off	Controller is off
	LED1...LED3 = off LED4 flashes irregularly	Controller is in Sleep mode (standby mode)
	LED1...LED3 = off LED4 flashes slowly (regularly)	Controller is in Bus Power Off mode

Switching on the controller

Display	Description	State
	LED1…LED4 = on	LED test being performed (duration min. 2 s)
	LED1…LED4 = off LED test is completed	BIOS post test still running
	LED2 flashes slowly (regularly) LED1, LED 3 and LED4 = off	BIOS OK Starting booting of controller
	LED1 = on or off, depending on the last state LED2 = on	Booting completed successfully

Controller in operation

Display	Description	State
	LED2 = on	Controller is running in T1 or T2 mode
	LED1 = on LED2 = on	Controller is running in Automatic mode

ProfiNet ping

Display	Description	State
	LED1 = on or off, depending on the last state LED2 = on LED3 = flashes quickly	ProfiNet ping is being executed

Maintenance

Display	Description	State
	LED1 = on or off, depending on the last state LED2 = on LED3 = flashes slowly (regularly)	Maintenance mode active (robot controller maintenance due)

Controller is shutting down

Display	Description	State
	LED1 = on or off, depending on the last state LED2 = on (Device switch/main switch off or power failure)	Controller not yet shutting down
	LED2 = on (Device switch/main switch off, power failure or soft power down)	Controller shutting down
	LED4 = flashes irregularly	Controller has been shut down

11.3 Controller System Panel LED error display

Error on switching on

Display	Description	Remedy
	LED2 = flashes quickly LED3 = on BIOS error has occurred	• Swap the SSD with an SSD from another robot controller • Check the USB stick

Error when booting

Display	Description	Remedy
	LED2 = flashes slowly LED3 = on Timeout on starting the PMS	Reload the image
	LED2 = flashes quickly LED3 = flashes quickly Software boot error	Reload the image

Error during operation

Display	Description	Remedy
	LED1 = on or off, depending on the last state LED2 = on LED3 = on Fatal error	Check error messages on the smartPAD

11.4 Creating or restoring a KR C5 recovery image

Description

The complete image can be created and, if necessary, reloaded using the KUKA Recovery Tool. The image can be created and/or loaded in Automatic mode.

The creation or restoration of the image is described in the following section.

Equipment

The following equipment is required:

Designation	Article number
KUKA.Recovery USB stick in version V.4 or higher	KUKA.Recovery USB Stick 4.0
PC/laptop with Windows 10, 64-bit	-

Precondition

- The robot controller is switched off.

Overview

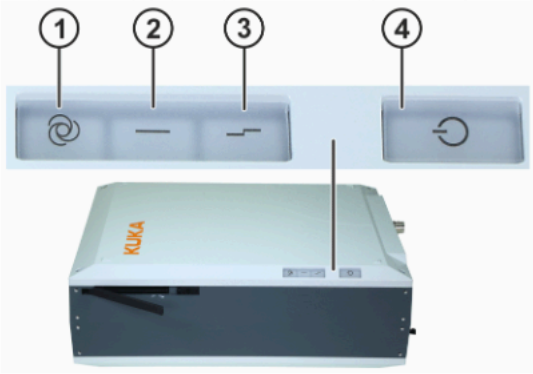

Fig. 11-2: Controller System Panel LED arrangement

Item	Element	Color	Meaning
1	LED1	White	Operating mode LED (Test or Automatic)
2	LED2	Green	Operating status LED
3	LED3	Red	Error LED
4	LED4 “soft power” button	White	Sleep LED

11.4.1 Creating a recovery image

Procedure

1. Connect the KUKA.Recovery USB stick to the robot controller.
2. Switch on the robot controller.
   The states are displayed on the CSP in the following order:

Creating an image in automatic mode

Display	Description	State
	LED2 flashes regularly	Robot controller is booting.
	LED2 = on	Boot operation has been completed.
	LED2 = on LED4 flashes regularly	Image of the C:\ partition is being created.
	LED2 = on LED4 = on	Image creation of the C:\ partition has been completed.
	LED1 flashes regularly LED2 = on LED4 = on	Image of the D:\ partition is being created.
	LED1 = on LED2 = on LED4 = on	Image creation of the D:\ partition has been completed.
	LED2…LED4 = on	A complete image has been created. All LEDs light up for 1 s.
	LED2 flashes slowly (regularly)	Controller is shutting down
	LED4 flashes irregularly	Controller has been shut down

Error

Display	Description	State
	LED1 and LED4 retain the most recently displayed state LED2 and LED3 = on	An error occurred during restoration of the image. Remedy: • Check SSD • Check the USB stick • Reload the image

11.4.2 Restoring a recovery image

Procedure

1. Connect the KUKA.Recovery USB stick to the robot controller.

2. Switch on the robot controller.
   The states are displayed on the CSP in the following order:

Restoring an image in automatic mode

Display	Description	State
	LED2 flashes regularly	Robot controller is booting.
	LED2 = on	Boot operation has been completed.
	LED2 = on LED4 flashes regularly	Image of the C:\ partition is being restored and copied to the hidden partition.
	LED2 = on LED4 = on	Restoration of the C:\ partition has been completed.
	LED1 flashes regularly LED2 = on LED4 = on	Image of the D:\ partition is being restored and copied to the hidden partition.
	LED1 = on LED2 = on LED4 = on	Image creation of the D:\ partition has been completed.
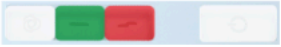	LED2…LED4 = on	A complete image has been restored. All LEDs light up for 1 s.
	LED2 flashes slowly (regularly)	Controller is shutting down
	LED4 flashes irregularly	Controller has been shut down

Error

Display	Description	State
	LED1 and LED4 retain the most recently displayed state LED2 and LED3 = on	An error occurred during restoration of the image. Remedy: • Check SSD • Check the USB stick • Reload the image

11.4.3 Terminating KUKA.Recovery

Procedure

1. Switch the robot controller off.
2. Remove the KUKA.Recovery USB stick.

11.4.4 Concluding work

Once the image has been created or restored, the following tasks must be carried out:

Procedure

1. Switch on the robot controller and check the settings.
2. Carry out a function test.

11.5 System board LED fault indicator

Description

There are LEDs on the system boards which light up red in the event of a fault. The light can be seen through the openings at the air inlet of the cooling system.

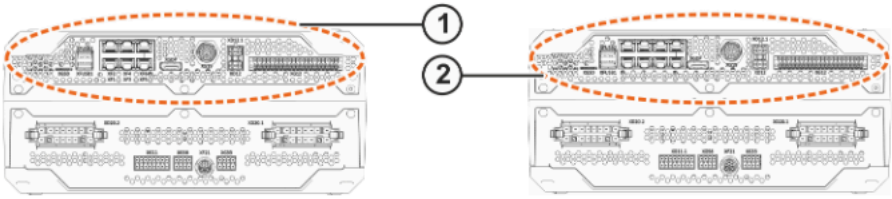

Fig. 11-3: Front view

1	“Basic” system board	2	“Performance” system board

Procedure

1. Switch off the robot controller.
2. Disconnect the power cable. Store the disconnected power cable out of sight and reach of the robot controller.
3. Contact KUKA Customer Support.

12 Decommissioning, storage and disposal

12.1 Decommissioning

Description

This section describes all the work required for decommissioning the robot controller if the robot controller is to be removed from the system. After decommissioning, it is prepared for storage or for transportation to a different location.

Equipment

The following equipment is required:

Designation	Article number
TORX screwdriver set TX10	-

Precondition

- The removal site is freely accessible.
- There is no hazard posed by system components.
- The robot controller is switched off at the device switch and the mains connection is disconnected.

Work safety

Work on the electrical and mechanical equipment of the machine may only be carried out by specially trained personnel.

Procedure

1. Release and unplug all peripheral connections.
2. Release and unplug the motor cable and control cable connectors.
3. Release and unplug the ground conductor.
4. Prepare the robot controller for storage.

12.1.1 Concluding work

The following concluding work must be carried out:

- Prepare individual components for storage (>>> *12.2 "Storage" Page 133*) or dispose of them in accordance with the pertinent regulations (>>> *12.3 "Disposal" Page 134*).

12.2 Storage

Description

The robot controller can be stored fully assembled.

Storage location

If the robot controller is to be put into long-term storage, the following points must be observed:

- The place of storage must be as dry and dust-free as possible.
- Avoid temperature fluctuations.

- Avoid wind and drafts.
- Avoid condensation.
- Observe and comply with the permissible temperature ranges for storage.
- Select a storage location in which the packaging film cannot be damaged.
- Only store the robot controller indoors.

Procedure

1. Clean the robot controller. No dirt may remain on or in the robot controller.
2. Inspect the robot controller, both internally and externally, for damage.
3. Remove batteries and store in accordance with the manufacturer's instructions.
4. Remove any foreign bodies.
5. Remove any corrosion expertly.
6. Attach all covers to the robot controller and check that the seals are correctly in place.
7. Seal off electrical connections with suitable covers.
8. Cover the robot controller with plastic film and seal it against dust.
   If necessary, add a desiccant beneath the sheeting.

12.3 Disposal

When the robot controller reaches the end of its useful life, it can be dismantled, and the materials can be disposed of properly by type.

The following table provides an overview of the materials used in the robot controller. Some of the plastic components are marked with a material designation and must be disposed of accordingly.

As the end user, the customer is legally required to return depleted batteries. Used batteries can be returned to the vendor or brought to the designated collection points (e.g. in communal refuse collection facilities or commercial centers) free of charge. The batteries can also be sent to the vendor by post.
The following symbols can be found on the batteries:

- Crossed-out garbage can: battery must not be disposed of with ordinary household refuse.

- Pb: battery contains more than 0.004 lead by weight.
- Cd: battery contains more than 0.002 cadmium by weight.
- Hg: battery contains more than 0.0005 mercury by weight.

Material	Subassembly, component	Additional information
Metals		
Aluminum	Housing cover and heat sink of the robot controller	
CuZn (gold-plated)	Connectors, contacts	Dispose of without dismantling
Copper	Electrical cables, wires	
Steel	Screws, washers, plates	

Material	Subassembly, component	Additional information
Steel (ST 52-3)	Screws, washers	
Electrical parts		
	Electronic components, such as RDC, EDS, circuit board	Dispose of as electrical scrap without disassembling
Plastics		
EPDM	Seals, covers	
ETFE	Flexible tube	
NBR	O-rings	
PE	Cable straps	
PUR	Cable sheaths	

13 Appendix

13.1 Applied standards and regulations

Name/Edition	Definition
2006/42/EC:2006	**Machinery Directive:** Directive 2006/42/EC of the European Parliament and of the Council of 17 May 2006 on machinery, and amending Directive 95/16/EC (recast)
2014/30/EU:2014	**EMC Directive:** Directive 2014/30/EC of the European Parliament and of the Council dated 26 February 2014 on the approximation of the laws of the Member States concerning electromagnetic compatibility
EN 55011:2009 + A1:2010	**Industrial, scientific and medical equipment:** Radio disturbance characteristics – Limits and methods of measurement
EN 60204-1:2018	**Safety of machinery:** Electrical equipment of machines – Part 1: General requirements
EN 61000-6-2:2005	**Electromagnetic compatibility (EMC):** Part 6-2: Generic standards; Immunity for industrial environments
EN 61000-6-4:2007 + A1:2011	**Electromagnetic compatibility (EMC):** Part 6-4: Generic standards; Emission standard for industrial environments
EN 61010-2-201:2013 + AC:2013	**Safety requirements for electrical equipment for measurement, control and laboratory use** Part 2-201: Particular requirements for control equipment
EN 614-1:2006+A1:2009	**Safety of machinery:** Ergonomic design principles - Part 1: Terms and general principles
EN 62061:2005 + A1:2013 + A2:2015	**Safety of machinery:** Functional safety of safety-related electrical, electronic and programmable electronic control systems
EN ISO 10218-1:2011	**Industrial robots – Safety requirements:** Part 1: Robots **Note:** Content equivalent to **ANSI/RIA R.15.06-2012, Part 1**
EN ISO 12100:2010	**Safety of machinery:** General principles of design, risk assessment and risk reduction
EN ISO 13849-1:2015	**Safety of machinery:** Safety-related parts of control systems - Part 1: General principles of design

EN ISO 13849-2:2012	**Safety of machinery:** Safety-related parts of control systems - Part 2: Validation
EN ISO 13850:2015	**Safety of machinery:** Emergency stop - Principles for design

14 KUKA Service

14.1 Requesting support

Introduction

This documentation provides information on operation and operator control, and provides assistance with troubleshooting. For further assistance, please contact your local KUKA subsidiary.

Information

The following information is required for processing a support request:

- Description of the problem, including information about the duration and frequency of the fault
- As comprehensive information as possible about the hardware and software components of the overall system

  The following list gives an indication of the information which is relevant in many cases:

  - Model and serial number of the kinematic system, e.g. the manipulator
  - Model and serial number of the controller
  - Model and serial number of the energy supply system
  - Designation and version of the system software
  - Designations and versions of other software components or modifications
  - Diagnostic package KRCDiag

    Additionally for KUKA Sunrise: existing projects including applications

    For versions of KUKA System Software older than V8: archive of the software (KRCDiag is not yet available here.)
  - Application used
  - External axes used

14.2 KUKA Customer Support

The contact details of the local subsidiaries can be found at:
www.kuka.com/customer-service-contacts

Index

2006/42/EC:2006 ... 137
2014/30/EU:2014 ... 137
95/16/EC ... 137

A

Accessories ... 17
ANSI/RIA R.15.06-2012 ... 137
Appendix ... 137
Applied standards and regulations ... 137
Automatic External (operating mode) ... 26
Automatic mode ... 44
Axis limitation, mechanical ... 32
Axis range ... 18

B

Br M ... 8
Brake defect ... 35
Brake release device ... 33
Braking distance ... 18

C

CE mark ... 18
CK, monitoring ... 31
Cleaning work ... 45
Components
  Accessories ... 11
  Connecting cables ... 11
  Manipulator ... 11
  Options ... 11
  Robot controller ... 11
  Software ... 11
  Teach pendant ... 11
Connecting cables ... 17
  Connecting ... 100
  Routing ... 66
Connection conditions ... 65
Connection panel ... 11
Control box
  “Basic” system board ... 12
Control unit ... 11
Controller System Panel ... 14
  LED display ... 125
  LED error display ... 127
Counterbalancing system ... 45
CSP ... 14
  LED display ... 125
  LED error display ... 127

D

Daisy chain ... 8
Daisy chain interface
  XF3 ... 73
  XF4 ... 73
Danger zone ... 19
Data cables XF21, connecting ... 91
Declaration of conformity ... 17
Declaration of incorporation ... 17, 18
Decommissioning ... 46, 133
Description ... 114, 116, 120
  Components, industrial robot ... 11
Device connection cable ... 13
Dimensions
  Robot controller ... 51
Disposal ... 46, 133, 134
Documentation, industrial robot ... 7
Drive box ... 13
Dynamic testing ... 83

E

EC declaration of conformity ... 17
EDS ... 8
EDS cool ... 8
Electromagnetic compatibility (EMC) ... 137
Electromagnetic compatibility (EMC): ... 137
Electromagnetic compatibility, EMC ... 57
EMC ... 8
EMC Directive ... 18, 137
EMD ... 8
EMERGENCY STOP device ... 28, 29, 34, 35
EMERGENCY STOP, external ... 29, 39
EMERGENCY STOP, local ... 39
EN 55011:2009 + A1:2010 ... 137
EN 60204-1:2018 ... 137
EN 61000-6-2:2005 ... 137
EN 61000-6-4:2007 + A1:2011 ... 137
EN 61010-2-201:2013 + AC:2013 ... 137
EN 614-1:2006+A1:2009 ... 137
EN 62061:2005 + A1:2013 + A2:2015 ... 137
EN ISO 10218-1:2011 ... 137
EN ISO 12100:2010 ... 137
EN ISO 13849-1:2015 ... 137
EN ISO 13849-2:2012 ... 138
EN ISO 13850:2015 ... 138
Enabling device ... 29, 34, 35
Enabling device, external ... 31
Enabling switch, external ... 79
Enabling switches ... 29
Equipment ... 116
Ethernet interface ... 8
  KLI IT ... 73
  KSI ... 72
EtherNet/IP ... 8
EXT (operating mode) ... 26
External axes ... 17
External axis ... 20
External axis enabling switch
  Function ... 80

F

Fast Measurement inputs ... 90
Faults ... 36
Function test ... 38

Fuse
Exchanging....120
Fusing....67

G

General safety measures....35
Ground conductor
Connecting....100

H

Hazardous substances....46
High-side mode....75
HMI....9

I

IFBstd....9
Industrial robot....17
Infeed....67
Inputs, Fast Measurement....89
Installation conditions....58
Intended use....15
Interface
KLI 1....73
KLI 2....73
Daisy chain....73
KEI....73
KLI IT....73
KONI....72
KSI Ethernet....72
USB....71
XGDP....74
Introduction....7
IT security....36

J

Jog mode....31, 34, 35

K

KCB....9
KEB....9
KEI....9, 73
KLI....9
XF5....73
XF6....73
KONI
Interface....72
KRL....9
KSB....9
KSI....9, 72
KSP....9
KSP warning messages....123
KSS....9, 19
KUKA Customer Support....139
KUKA Service....139
KUKA smartPAD....19
KUKA smartPAD-2....9, 19

L

Labeling....33
Liability....17
Linear unit....17
Low-side mode....75
Low Voltage Directive....18

M

M....9
Machine data....39
Machinery Directive....18, 137
Mains power supply, connecting....101
Maintenance....44, 107
Maintenance symbols....107
Manipulator....9, 17, 19
Manual mode....43
Material....115, 116, 120
Material designation....134
Maximum cable length.. 71–74, 76, 78, 82, 90, 92
Mechanical end stops....32
mini CSP....9
Minimum clearances, robot controller....51
Misuse....15
Monitoring, physical safeguards....27, 28
Monitoring, velocity....31
Motherboard battery, exchanging....116
Motor cable, data cable....13
Motor interface
XD20.1....92
XD20.2....92

N

NA....9

O

Operating mode selection....24–26
Operation....105
Operator safety....24, 27, 28, 34, 35
Operators....21
Options....17
Overload....35
Overview
Start-up....97
Overview of planning....57

P

Panic position....30
PE, equipotential bonding....64
PELV....9
PELV power supply unit....75, 76, 78

Performance level....93
Performance Level....24
Peripheral cables....13
Peripheral contactor....42
Personal protective equipment....21
Personnel....20
PFH values....93
PL....93
Planning....57
Planning, overview....57
Plant integrator....20
Plates and labels....53
PLC....10
PoE....9
Positioner....17
Power cutoff....77
Power failure....77
Power supply
  Fast Measurement....90
Power supply connection
  XD1....67
Power unit....11
Pressure Equipment Directive....45
Preventive maintenance work....45
Product description....11
Protective equipment....31
PSA....21

Q

QBS....9

R

RDC....9
RDC cool....9
Reaction distance....18
Recommissioning....37, 97
Release device....33
Repair....44, 111
Robot controller....11, 17
  Installing....99
Robot controller stacked....59
Robot controller, switching on....102, 105

S

Safe input....82
Safe operational stop....19
Safe output....84
Safeguards, external....34
Safely isolated....75, 76, 78
Safety....17
Safety controller....24
Safety functions....24, 34
Safety functions, Ethernet safety interface....85
Safety functions, overview....24
Safety instructions....7
Safety interfaces....13
Safety logic....11
Safety measures....35
Safety of machinery....137, 138
Safety options....19
Safety STOP 0....19
Safety STOP 1....19
Safety STOP 2....19
Safety STOP 0....19
Safety STOP 1....19
Safety STOP 2....19
Safety zone....19, 22
Safety, general....17
SD card....71
Service life....18
Simulation....44
Single point of control....46
SION....9
smartPAD....10, 20, 36
  Plugging in....101
smartPAD-2....20
smartPAD cable....13
Soft power button....105
Software....17
Software limit switches....32, 34, 35
SOP....10
Spare parts....116, 121
SPOC....46
SSD....10
  Exchanging....114
Start-up....37, 97
  Overview....97
Start-up mode....41
STOP 0....18, 20
STOP 1....18, 20
STOP 2....18, 20
Stop category 0....20
Stop category 1....20
Stop category 2....20
Stop category 1, Drive Ramp Stop....20
Stop reactions....22, 23
STOP 1 - DRS....20
Stopping distance....18, 22
Storage....46, 133
Support request....139
System board....10
System integrator....18, 20, 21

T

T1 (operating mode)....20, 26
T2 (operating mode)....20, 26
Target group....7
Teach pendant....17
Technical data....49
Terms
  Used....8
Terms used....8
Terms, safety....18
Trademarks....8
Training....7
Transportation....37, 95

Troubleshooting..... 123
Turn-tilt table.....17

U

UPS..... 10, 77
UPS, battery box.....13
UPS, connecting.....101
US1..... 10
US2.....10, 42
USB.....10
    Interface.....71
User.....18, 21

V

Velocity monitoring..... 31
Vibration resistance.....50
VSS.....20

W

Warnings.....7
Work safety.....116
Workspace.....18, 22

X

XD1
    Power supply connection.....67
XD20.1
    Motor interface..... 92
XD20.2
    Motor interface..... 92
XF1 - XF8
    Interface.....71
XG11.1
    Configuring.....102
XG33
    Inputs, Fast Measurement..... 89
XG58
    Configuring.....102
XGDP.....74
XGSD
    Interface.....71
    SD card..... 71